TORQUE SETTINGS

BOLT & SCREW CHART SCHEMATICS

SECTION 11

SECTION	PAGE(S)
11A Torque Settings	01
11B Bolt Chart	01
11C Screw Chart	01 - 02
11D Schematics	01 - 29

DAW INDUSTRIES

© Copyright 2015, DAW Industries, San Diego, CA. All Rights Reserved.

TORQUE SETTINGS

BOLT & SCREW CHART SCHEMATICS

SECTION 11

SECTION	PAGE(S)
11A Torque Settings	01
11B Bolt Chart	01
11C Screw Chart	01 - 02
11D Schematics	01 - 29

© Copyright 2015, DAW Industries, San Diego, CA. All Rights Reserved.

TORQUE SPECS

SCREWS & BOLTS FOR TYPE "T" KNEES

Knee Bolt (7/16 SAE)	**108 in/lb** (12.2 Nm)
Pylon Clamp Screw 6mm	**88 in/lbs** (9.9 Nm)
Socket Attachment Screws 6mm	**88 in/lbs** (9.9 Nm)

SCREWS & BOLTS FOR TYPE "D" KNEES

Knee Bolt 8mm	**174 in/lbs** (19.7 Nm)
Pylon Clamp Screw 6mm	**88 in/lbs** (9.9 Nm)
Rotation Set Screws 3mm	**13 in/lbs** (1.5 Nm)
Stability Set Screw (Posterior Linkage of RK-43ØØ)	**40 in/lbs** (4.5 Nm)
Friction Lock Set Screws 2mm	**30 in/lbs** (3.4 Nm)

SCREWS & BOLTS FOR BOA

Main Locking Screw	**132 in/lbs** (14.9 Nm)
Locking Ring Screw	**88 in/lbs** (9.9 Nm)
Alignment Screws	**88 in/lbs** (9.9 Nm)

ALL OTHER SCREWS INCLUDING THE ULTRA PYRAMID SCREWS

Locking Set Screws 1.5 & 2 mm	**24 in/lbs** (2.7 Nm)
Screws 4 & 5 mm	**68 in/lbs** (7.7 Nm)
Screws 6 mm	**88 in/lbs** (9.9 Nm)
Screws 8 mm (Except Knee Bolt and Foot Bolt; See Foot Bolts or Knee Bolts)	**108 in/lbs** (12.2 Nm)

FOOT BOLTS

Into all ankles which stock # starts with "RAJ-"	**174 in/lbs** (19.7 Nm)
Into all other ankles	**108 in/lbs** (12.2 Nm)

= Loctite 242 MUST be used

© Copyright 2015, DAW Industries, San Diego, CA. All Rights Reserved.

BOLT SIZE CHART

FOR CONNECTING TYPE "T" KNEES TO SOCKET CONNECTORS

* Type "T" Knee Units = DAW Adult Knees which stock # starts with a "T"

Connectors / Knee Units	Washer?	TKC-ØA & TGC-ØA	TKC-S	TKC-SA	TKR-Ø1	TSC-A	TSC-A & TWP-A2	TSC-KDAL	TSC-KDL	TSC-PSD	TWB-Ø4	TWB-Ø4 & TWP-A2
TGK-5PSØMPK TGK-5PSØSLK TGK-5PSØ TGK-5PSØHA	Yes	7/16" x 1 3/4"	7/16" x 1 1/4"	7/16" x 1 1/2"	7/16" x 1 3/4"	7/16" x 1 3/4"	7/16" x 2"	7/16" x 1 1/4"	7/16" x 1 1/8"	7/16" x 1 1/4"	7/16" x 1 3/4"	7/16" x 2"
TGK-4PØØ	Yes	7/16" x 1 3/4"	7/16" x 1 1/4"	7/16" x 1 1/2"	7/16" x 1 1/2"	7/16" x 1 3/4"	7/16" x 2"	7/16" x 1 1/8"	7/16" x 1"	7/16" x 1 1/8"	7/16" x 1 3/4"	7/16" x 2"
TGK-4PØØ-P	Yes	7/16" x 1 3/4"	7/16" x 1 1/4"	7/16" x 1 1/2"	7/16" x 1 3/4"	7/16" x 1 3/4"	7/16" x 2"	7/16" x 1 1/4"	7/16" x 1 1/4"	7/16" x 1 1/4"	7/16" x 1 3/4"	7/16" x 1 3/4
TGK-4P1Ø TGK-5PS1ØMPK TGK-5PS1ØSLK	Yes	7/16" x 1 1/2"	7/16" x 1"	7/16" x 1 1/4"	7/16" x 1 1/2"	7/16" x 1 1/2"	7/16" x 1 3/4"	7/16" x 1"	7/16" x 1"	7/16" x 1 3/4"	7/16" x 1 1/2"	7/16" x 1 3/4
TK-4PØØ TK-4Ø1Ø	Yes	7/16" x 1 3/4"	7/16" x 1 1/4"	7/16" x 1 1/2"	7/16" x 1 1/2"	7/16" x 1 3/4"	7/16" x 2"	7/16" x 1 1/8"	7/16" x 1"	7/16" x 1"	7/16" x 1 3/4"	7/16" x 2"
TK-4PØØ-P	No	7/16" x 1 3/4"	7/16" x 1 1/4"	7/16" x 1 1/4"	7/16" x 1 3/4"	7/16" x 1 3/4"	7/16" x 1 3/4"	7/16" x 1 1/4"	7/16" x 1"	7/16" x 1"	7/16" x 1 3/4"	7/16" x 1 3/4"
TGK-5ØSØ	Yes	7/16" x 1 3/4"	7/16" x 1 1/2"	7/16" x 1 1/2"	7/16" x 1 3/4"	7/16" x 1 3/4"	7/16" x 2 1/4"	7/16" x 1 1/2"	7/16" x 1 1/4"	7/16" x 1 1/2"	7/16" x 1 3/4"	7/16" x 2"
TGK-4ØØØ TGK-4ØØ1 TGK-4ØØ2	Yes	7/16" x 2"	7/16" x 1 1/2"	7/16" x 1 3/4"	7/16" x 1 3/4"	7/16" x 1 3/4"	7/16" x 2 1/4"	7/16" x 1 1/2"	7/16" x 1 1/2"	7/16" x 1 1/2"	7/16" x 1 3/4"	7/16" x 2 1/4"
TK-4ØØØ TK-4ØØ1	Yes	7/16" x 2"	7/16" x 1 1/2"	7/16" x 1 3/4"	7/16" x 1 3/4"	7/16" x 2"	7/16" x 2 1/4"	7/16" x 1 1/2"	7/16" x 1 1/2"	7/16" x 1 1/2"	7/16" x 2"	7/16"

22mm PYLON SYSTEM Knee Units	Washer?	GUPAC-MP1	TBC-	TWC-C4	TKC-CA	TSC-KD-CAL	TSC-KD-CL	TSC-WC	TSC-WC & TWP-C2	TWB-C	TWB-C & TWP-C2
TK-4ØC TK-4PØC	Small Lock Washer	3/8" x 3/4"	3/8" x 1 1/4"	3/8" x 3/4"	3/8" x 1 1/4"	3/8" x 3/4"	3/8" x 3/4"	3/8" x 1 1/4"	3/8" x 1 3/8"	3/8" x 1 1/4"	N/A
TK-1C1	Small Lock Washer	3/8" x 1"	3/8" x 1 1/2"	3/8" x 1"	3/8" x 1 1/2"	3/8" x 1"	3/8" x 1"	3/8" x 1 1/4"	3/8" x 3/4"	3/8" x 1 1/2"	N/A

6mm SCREW LENGTH CHART

Which Length 6mm Screws Should Be Used

(When attaching connectors to knee tops or socket inserts)

CONNECTING	GUPA-SHUTLAM 4SQ/4RD	GUPA-TH4H-8/9/1ØCM	GUPA-TH4ROT	ANY TYPE "T" KNEES*	PAD-1KØ6	PAD-1KØ7	PAD-1K1Ø	PSD-1K11	RSC-FB	RSC-SA	RWB-Ø	RWB-1	TSC-A	TSC-BX	TSC-T	TWB-Ø4
RSC-SA	20 mm	25 mm	20 mm	16 mm	16 mm	16 mm	16 mm	16 mm	16 mm	N/A	25 mm	25 mm	20 mm	20 mm	20 mm	20 mm
TGB-Ø	14 mm	25 mm	14 mm	14 mm	12 mm	12 mm	12 mm	12 mm	14 mm	16 mm	20 mm	20 mm	16 mm	16 mm	20 mm	20 m
TGB-ØT	14 mm	25 mm	14 mm	12 mm	14 mm	14 mm	14 mm	14 mm	14 mm	16 mm	25 mm	25 mm	20 mm	20 mm	2020 mm	mm
TGC-ØA	16 mm	N/A	N/A	12 mm	N/A	N/A	N/A	N/A	N/A	16 mm	N/A	N/A	N/A	N/A	N/A	N/A
TGP-F4	12 mm	25 mm	12 mm	12 mm	12 mm	12 mm	12 mm	12 mm	12 mm	16 mm	20 mm	20 mm	16 mm	16 mm	20 mm	16 mm
TGP-M4	12 mm	25 mm	12 mm	12 mm	12 mm	12 mm	12 mm	12 mm	12 mm	16 mm	20 mm	20 mm	16 mm	16 mm	20 mm	16 mm
TKC-C4	12 mm	25 mm	12 mm	N/A	12 mm	12 mm	12 mm	12 mm	16 mm	20 mm	20 mm	20 mm	16 mm	16 mm	20 mm	16 mm
TKC-S	16 mm	25 mm	16 mm	N/A	16 mm	16 mm	16 mm	16 mm	16 mm	20 mm	25 mm	25 mm	20 mm	20 mm	25 mm	20 mm
TKC-SA	16 mm	25 mm	16 mm	N/A	16 mm	16 mm	16 mm	16 mm	12 mm	16 mm	25 mm	25 mm	20 mm	20 mm	20 mm	20 mm
TKR-Ø1	12 mm	25 mm	12 mm	N/A	12 mm	12 mm	12 mm	12 mm	12 mm	16 mm	20 mm	20 mm	16 mm	16 mm	20 mm	16 mm
TSC-PSD	12 mm	25 mm	12 mm	N/A	12 mm	12 mm	12 mm	12 mm	16 mm	14 mm	20 mm	20 mm	16 mm	16 mm	20 mm	16 mm
TSC-PSDS	12 mm	25 mm	12 mm	N/A	12 mm	12 mm	12 mm	12 mm	16 mm	14 mm	20 mm	20 mm	16 mm	16 mm	20 mm	16 mm
TTB-1	16 mm	25 mm	16 mm	12 mm	12 mm	12 mm	12 mm	12 mm	16 mm	16 mm	20 mm	20 mm	16 mm	16 mm	20 mm	16 mm

* Type "T" Knee Units = DAW Adult Knees which stock # starts with a "T"

= Buttonhead Screw
= Flathead Screw

Continued

6mm SCREW LENGTH CHART

Which Length 6mm Screws Should Be Used

(When attaching connectors to knee tops or socket inserts)

CONNECTING	GUPA-SHUTLAM 4SQ/4RD	GUPA-TH4H-8/9/1ØCM	GUPA-TH4ROT	ANY TYPE "T" KNEES*	PAD-1KØ6	PAD-1KØ7	PAD-1K1Ø	PSD-1K11	RSC-FB	RSC-SA	RWB-Ø	RWB-1	TSC-A	TSC-BX	TSC-T	TWB-Ø4
GUPA-4HCLAMP	14 mm	25 mm	14 mm	16 mm	14 mm	14 mm	14 mm	14 mm	12 mm	14 mm	20 mm	20 mm	16 mm	16 mm	20 mm	16 mm
GUPA-M4H	12 mm	25 mm	12 mm	12 mm	12 mm	12 mm	12 mm	12 mm	12 mm	12 mm	20 mm	20 mm	16 mm	16 mm	20 mm	16 mm
GUPS-4HCLAMP	14 mm	25 mm	14 mm	16 mm	14 mm	14 mm	14 mm	14 mm	12 mm	14 mm	20 mm	20 mm	16 mm	16 mm	20 mm	16 mm
GUPS-F4H	12 mm	25 mm	12 mm	12 mm	12 mm	12 mm	12 mm	12 mm	12 mm	12 mm	20 mm	20 mm	16 mm	16 mm	20 mm	16 mm
GUPS-F4HROT	14 mm	25 mm	14 mm	16 mm	14 mm	14 mm	14 mm	14 mm	12 mm	14 mm	20 mm	20 mm	16 mm	16 mm	20 mm	16 mm
GUPS-M4H	12 mm	25 mm	12 mm	12 mm	12 mm	12 mm	12 mm	12 mm	12 mm	12 mm	20 mm	20 mm	16 mm	16 mm	20 mm	16 mm
GUPT-4HCLAMP	14 mm	25 mm	14 mm	16 mm	14 mm	14 mm	14 mm	14 mm	12 mm	14 mm	20 mm	20 mm	16 mm	16 mm	20 mm	16 mm
GUPT-F4H	12 mm	25 mm	12 mm	12 mm	12 mm	12 mm	12 mm	12 mm	12 mm	12 mm	20 mm	20 mm	16 mm	16 mm	20 mm	16 mm
GUPT-F4HROT	12 mm	25 mm	12 mm	16 mm	14 mm	14 mm	14 mm	14 mm	12 mm	12 mm	20 mm	20 mm	16 mm	16 mm	20 mm	16 mm
GUPT-M4H	12 mm	25 mm	12 mm	12 mm	12 mm	12 mm	12 mm	12 mm	12 mm	12 mm	20 mm	20 mm	16 mm	16 mm	20 mm	16 mm
RB-Ø	12 mm	25 mm	12 mm	12 mm	12 mm	12 mm	12 mm	12 mm	12 mm	14 mm	20 mm	20 mm	16 mm	16 mm	20 mm	16 mm
RKC-A	12 mm	25 mm	12 mm	N/A	12 mm	12 mm	12 mm	12 mm	12 mm	14 mm	20 mm	20 mm	16 mm	16 mm	20 mm	16 mm
RKC-AP	12 mm	25 mm	12 mm	N/A	12 mm	12 mm	12 mm	12 mm	12 mm	14 mm	20 mm	20 mm	16 mm	16 mm	20 mm	16 mm
RKC-S	12 mm	25 mm	12 mm	N/A	12 mm	12 mm	12 mm	12 mm	12 mm	N/A	20 mm	20 mm	16 mm	16 mm	20 mm	16 mm

* Type "T" Knee Units = DAW Adult Knees which stock # starts with a "T"

= Buttonhead Screw
= Flathead Screw

SCHEMATICS

KNEES

	SECTION	CATALOG PAGE
DK-42ØØ	11D	02
TGK-4ØØØ	11D	03
TGK-4ØØ1	11D	04
TGK-4ØØ2	11D	05
TGK-4PØØHW	11D	06
TGK-4PØØ-P	11D	07
TGK-4P1Ø	11D	08
TGK-5ØSØ	11D	09
TGK-5PSØ	11D	10
TGK-5PSØHA	11D	11
TGK-5PSØSLK	11D	12
TGK-5PS1Ø	11D	13
THK-4PSC	11D	14
THK-4PSSL	11D	15
THK-4RP1HW	11D	16
THK-5PSØMPK	11D	17
THK-5PSØMPK PYR	11D	18
THK-5PS1ØMPK	11D	19
TK-1ØØ1	11D	20
TK-1C1	11D	21
TK-1HØØ	11D	22
TK-4ØC	11D	23
TK-4PØC	11D	24
TK-4ØØØ	11D	25
TK-4ØØ1	11D	26
TK-4Ø1Ø	11D	27
TK-4PØØ	11D	28
TK-4PØØ-P	11D	29

HIPS

TGH-Ø1	11D	30
TH-Ø1	11D	31
TCH-Ø1	11D	32

© Copyright 2015, DAW Industries, San Diego, CA. All Rights Reserved.

SCHEMATICS

DK-42ØØ
4-BAR FRICTION KNEE

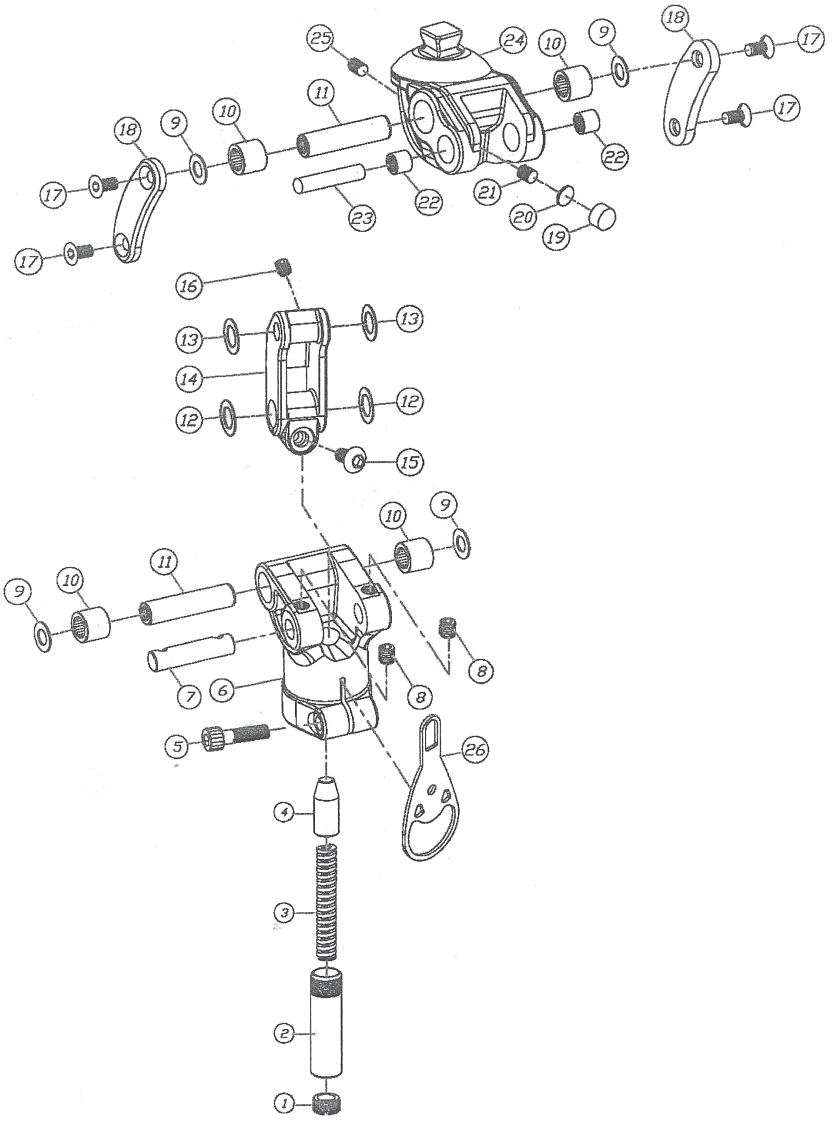

© Copyright 2015, DAW Industries, San Diego, CA. All Rights Reserved.

TGK-4ØØØ

4-BAR FRICTION KNEE

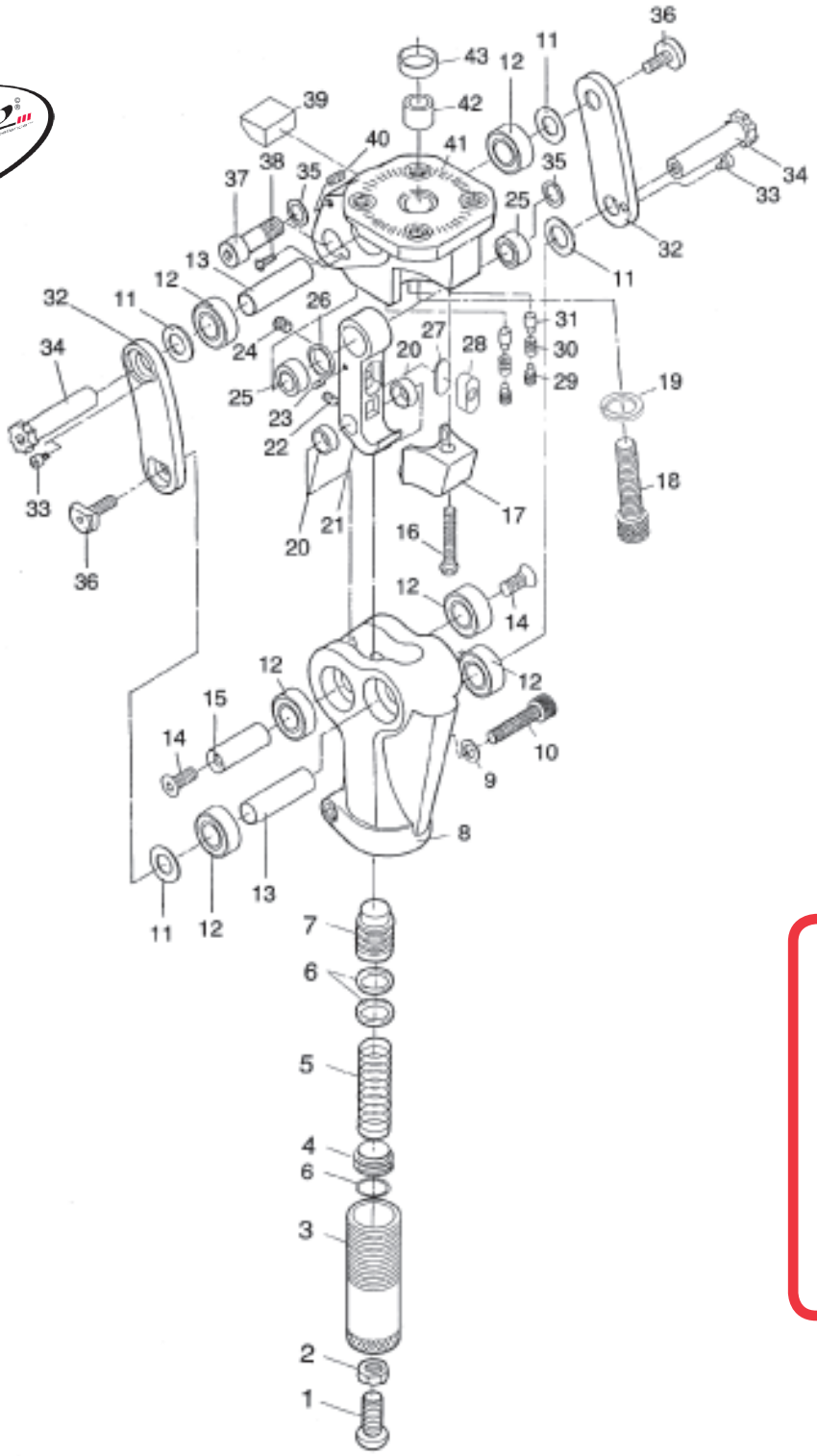

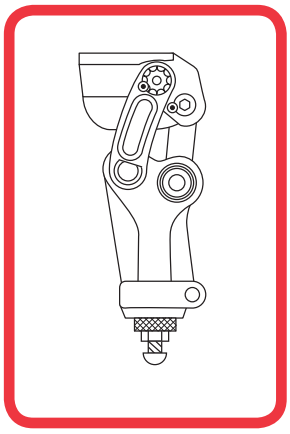

TGK-4ØØØ

© Copyright 2015, DAW Industries, San Diego, CA. All Rights Reserved.

SCHEMATICS

TGK-4ØØ1

4-BAR FRICTION KNEE

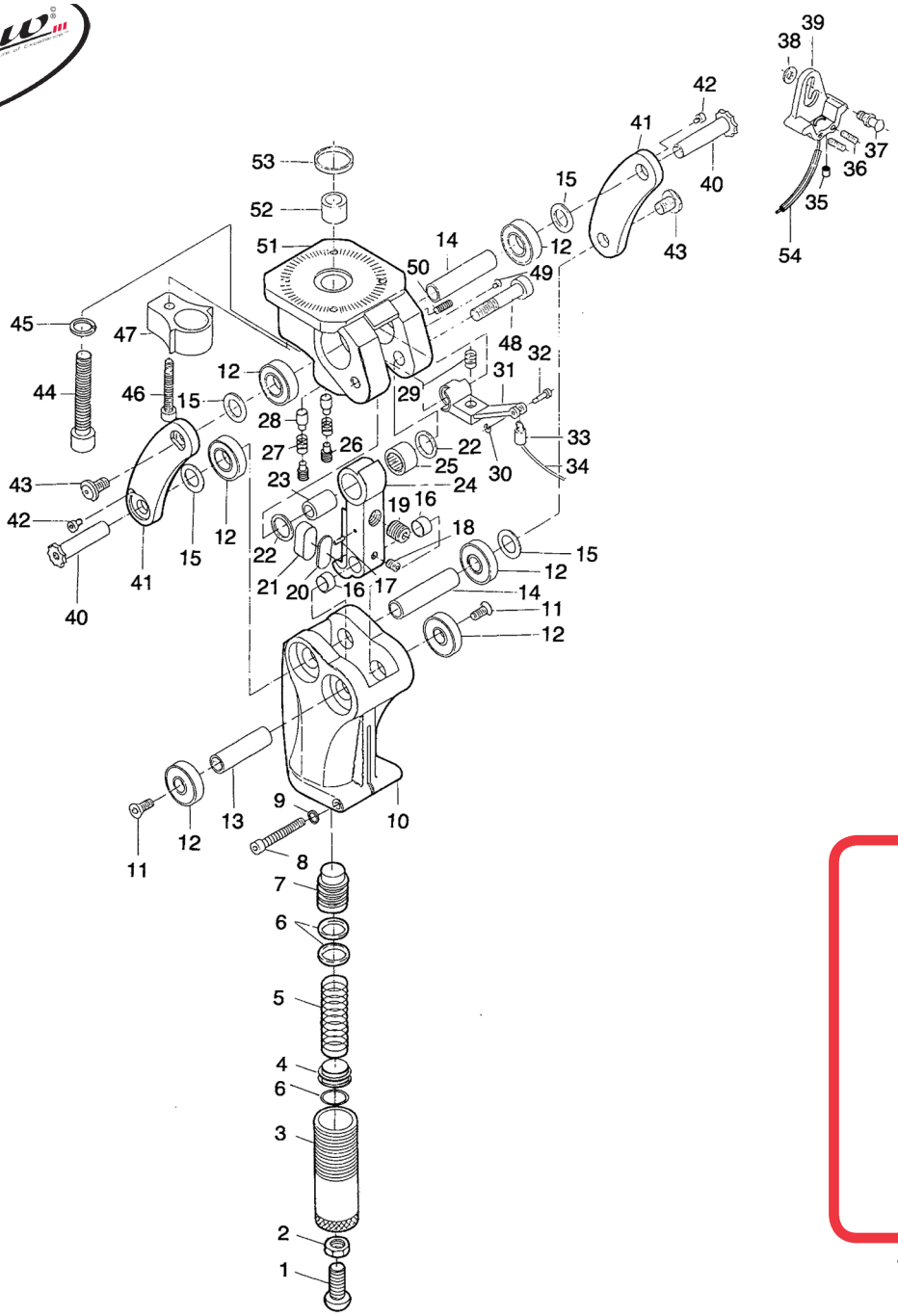

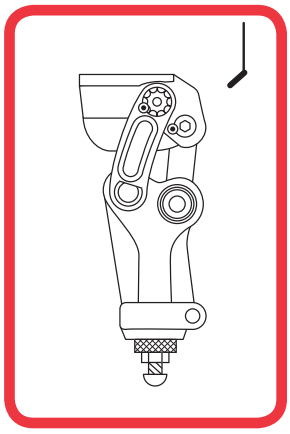

TGK-4ØØ1

© Copyright 2015, DAW Industries, San Diego, CA. All Rights Reserved.

TGK-4ØØ2

4-BAR STABILITY KNEE

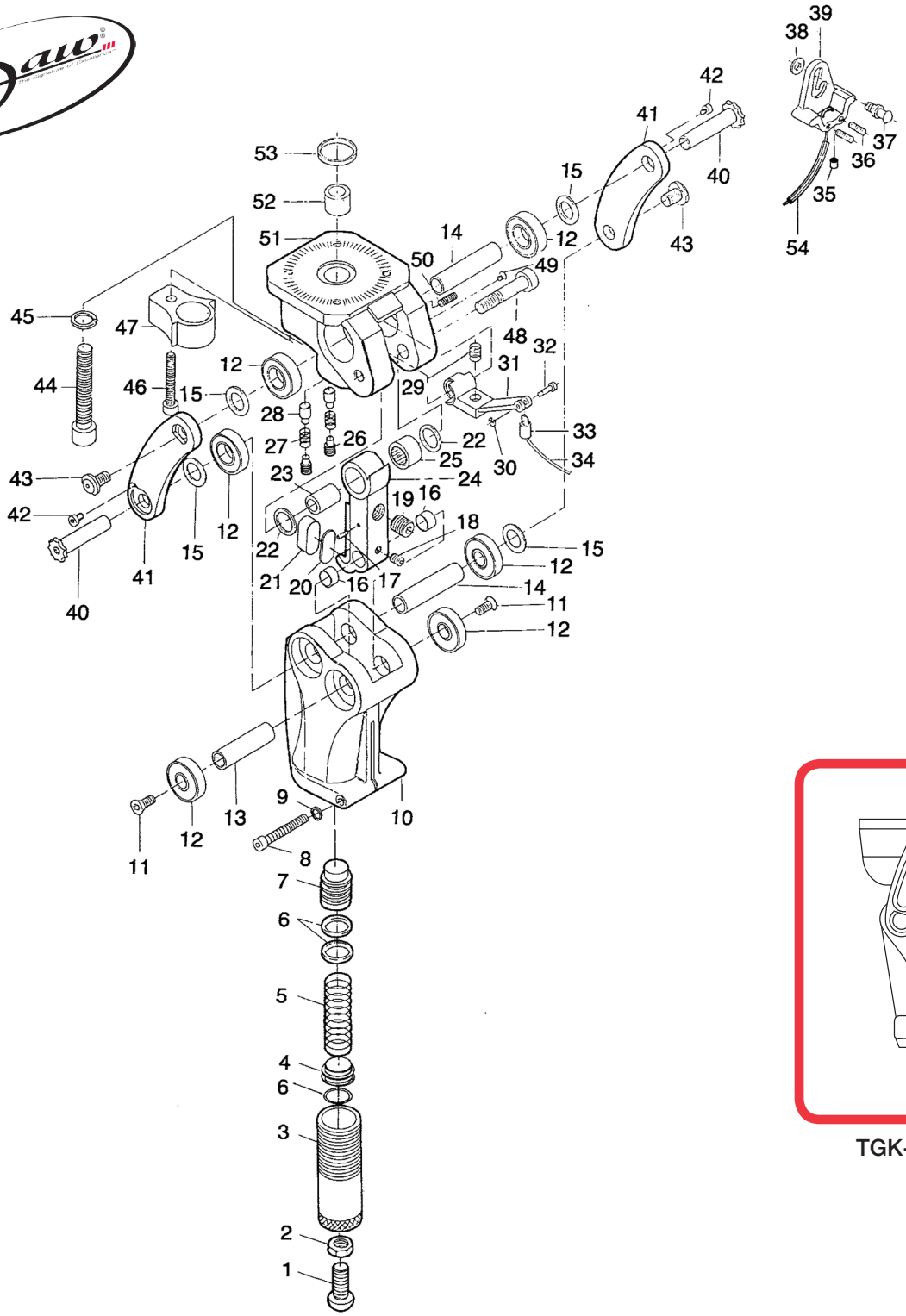

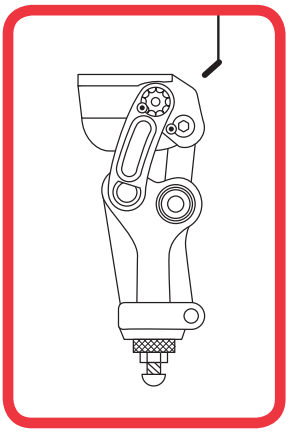

TGK-4ØØ2

© Copyright 2015, DAW Industries, San Diego, CA. All Rights Reserved.

SCHEMATICS

TGK-4PØØHW

4-BAR PNEUMATIC KNEE

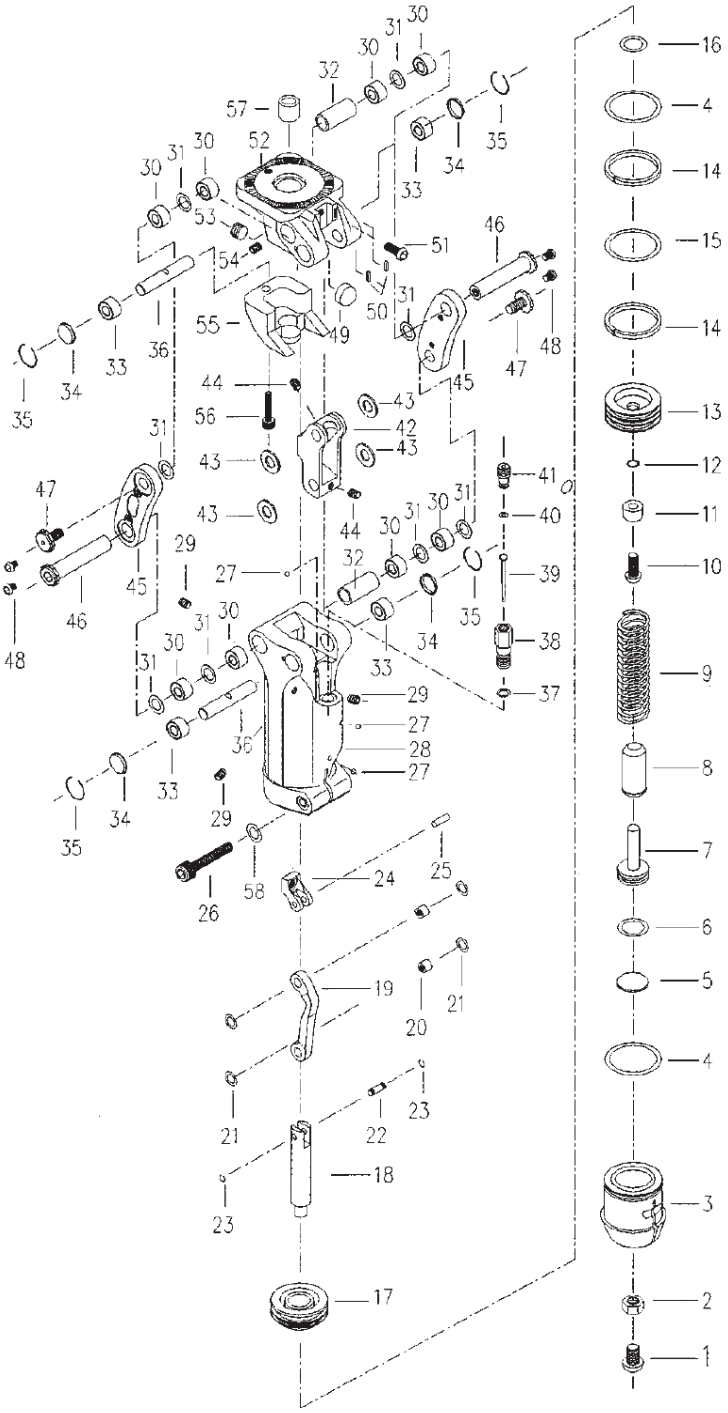

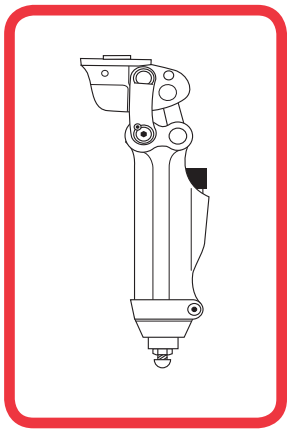

TGK-4PØØ

© Copyright 2015, DAW Industries, San Diego, CA. All Rights Reserved.

TGK-4PØØ-P

4-BAR PNEUMATIC KNEE

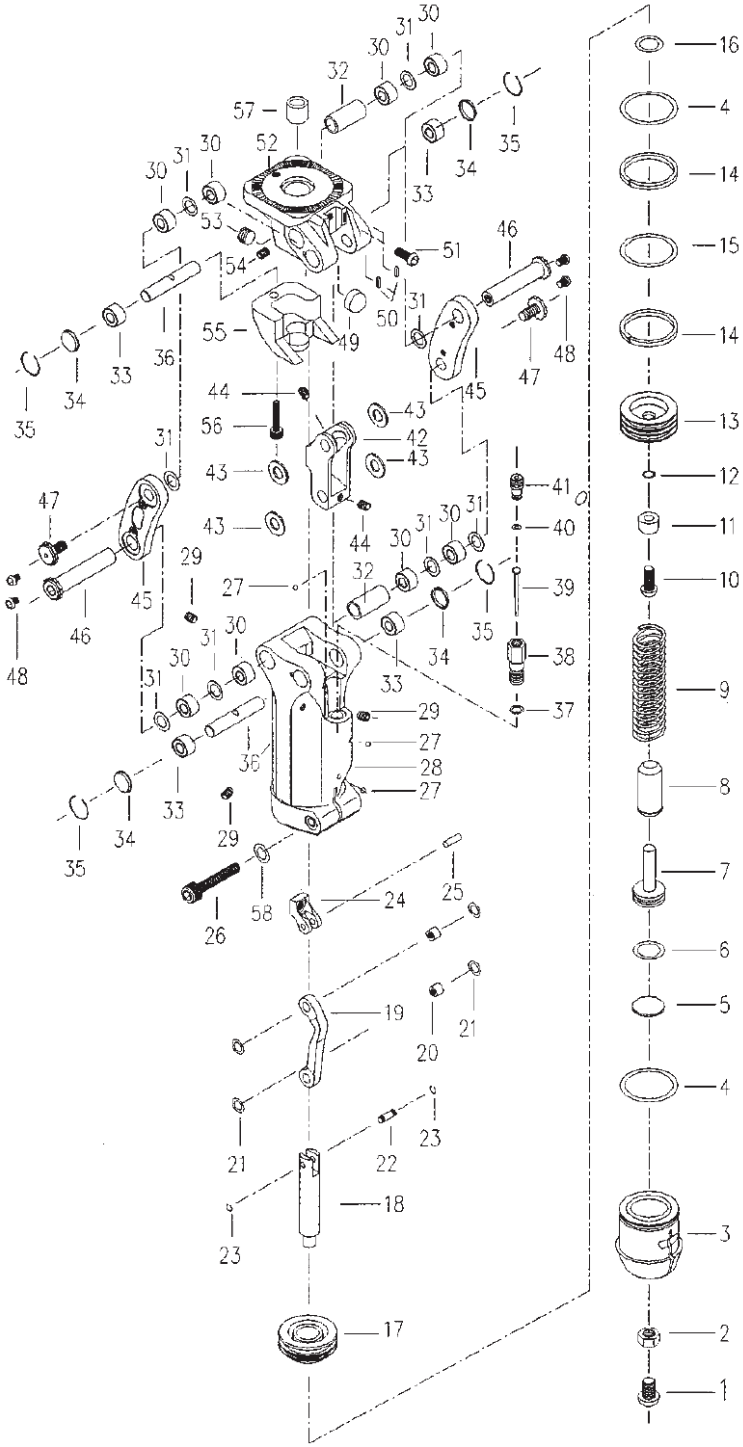

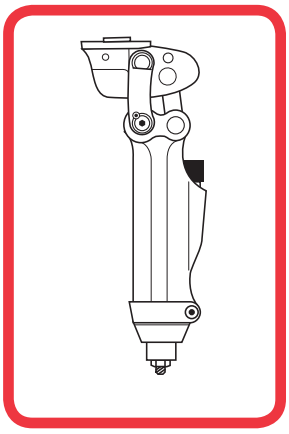

TGK-4PØØ-P

© Copyright 2015, DAW Industries, San Diego, CA. All Rights Reserved.

SCHEMATICS

TGK-4P1Ø

4-BAR PNEUMATIC KNEE

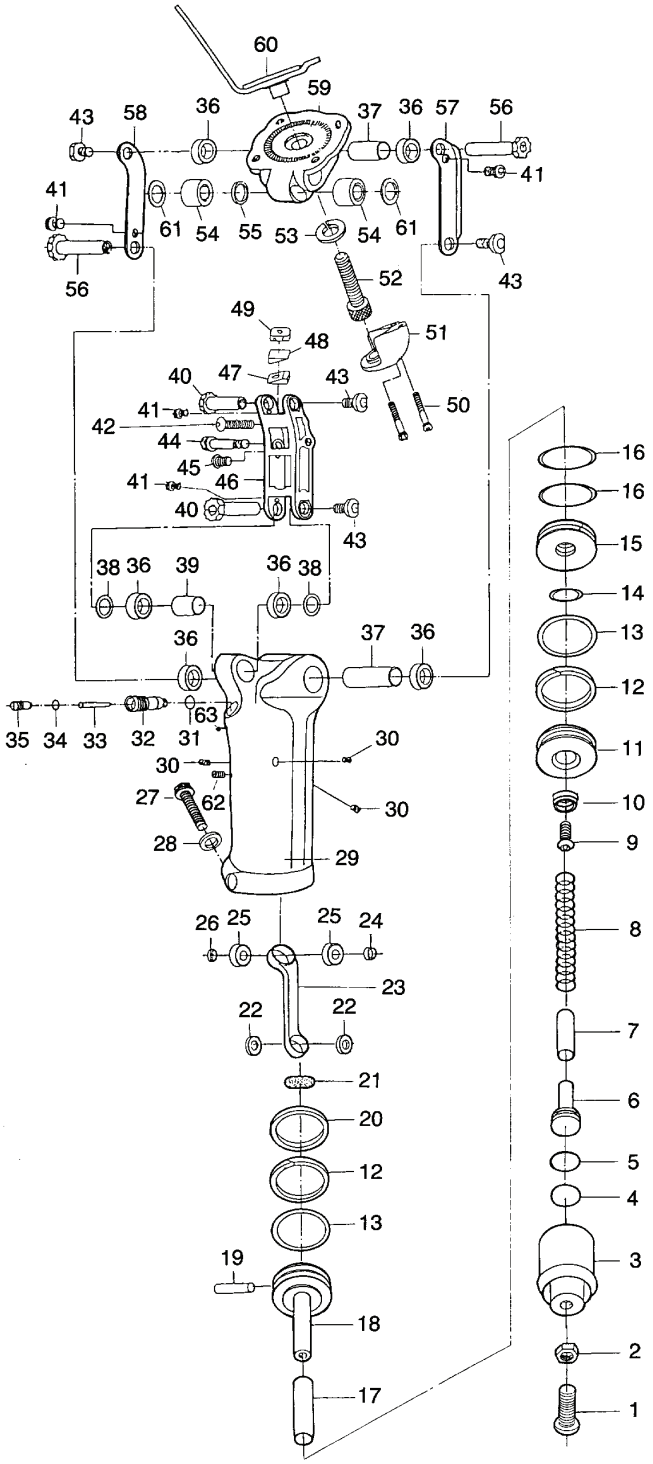

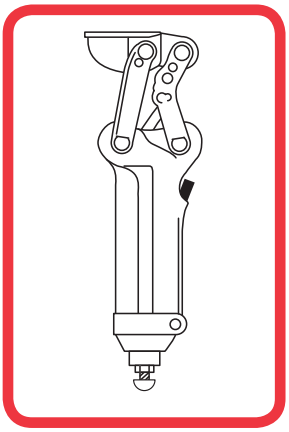

TGK-4P1Ø

© Copyright 2015, DAW Industries, San Diego, CA. All Rights Reserved.

TGK-5ØSØ

PC FRICTION KNEE

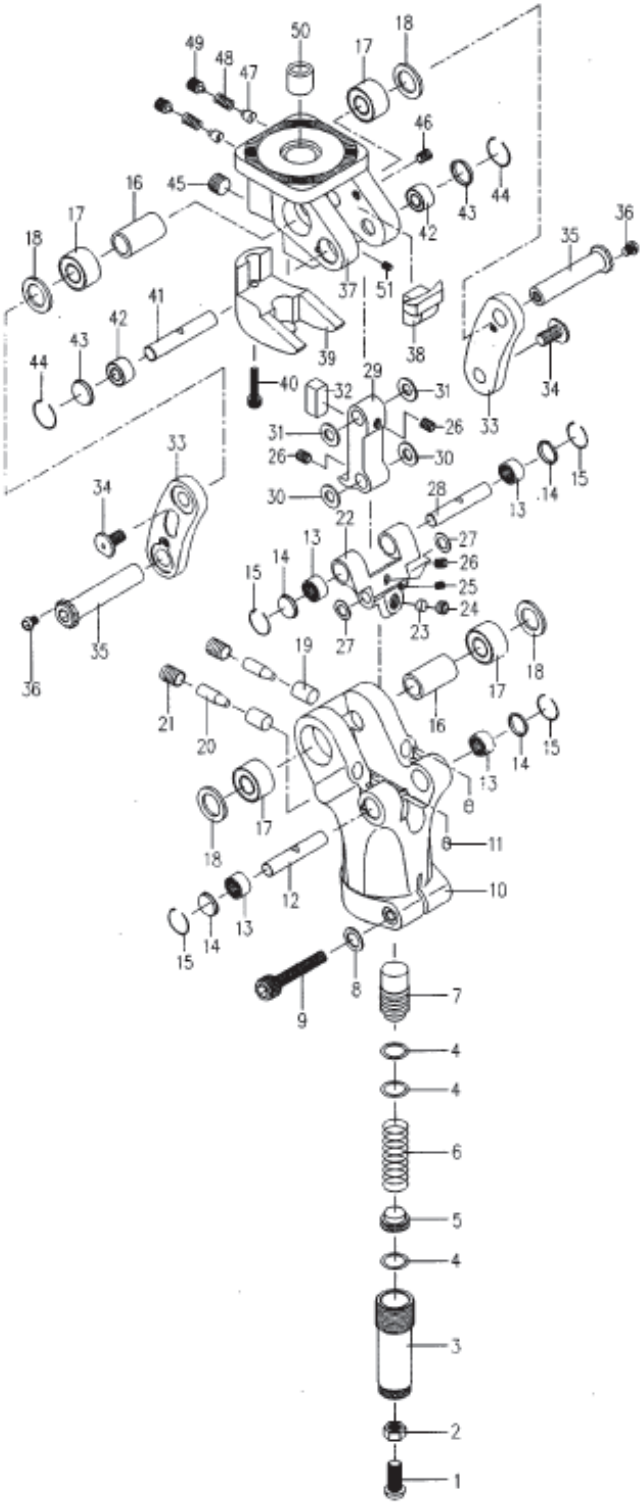

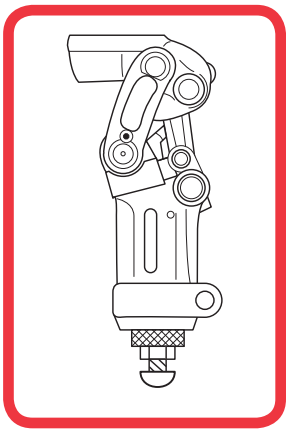

TGK-5ØSØ

© Copyright 2015, DAW Industries, San Diego, CA. All Rights Reserved.

SCHEMATICS

TGK-5PSØ
PC PERFORMER KNEE

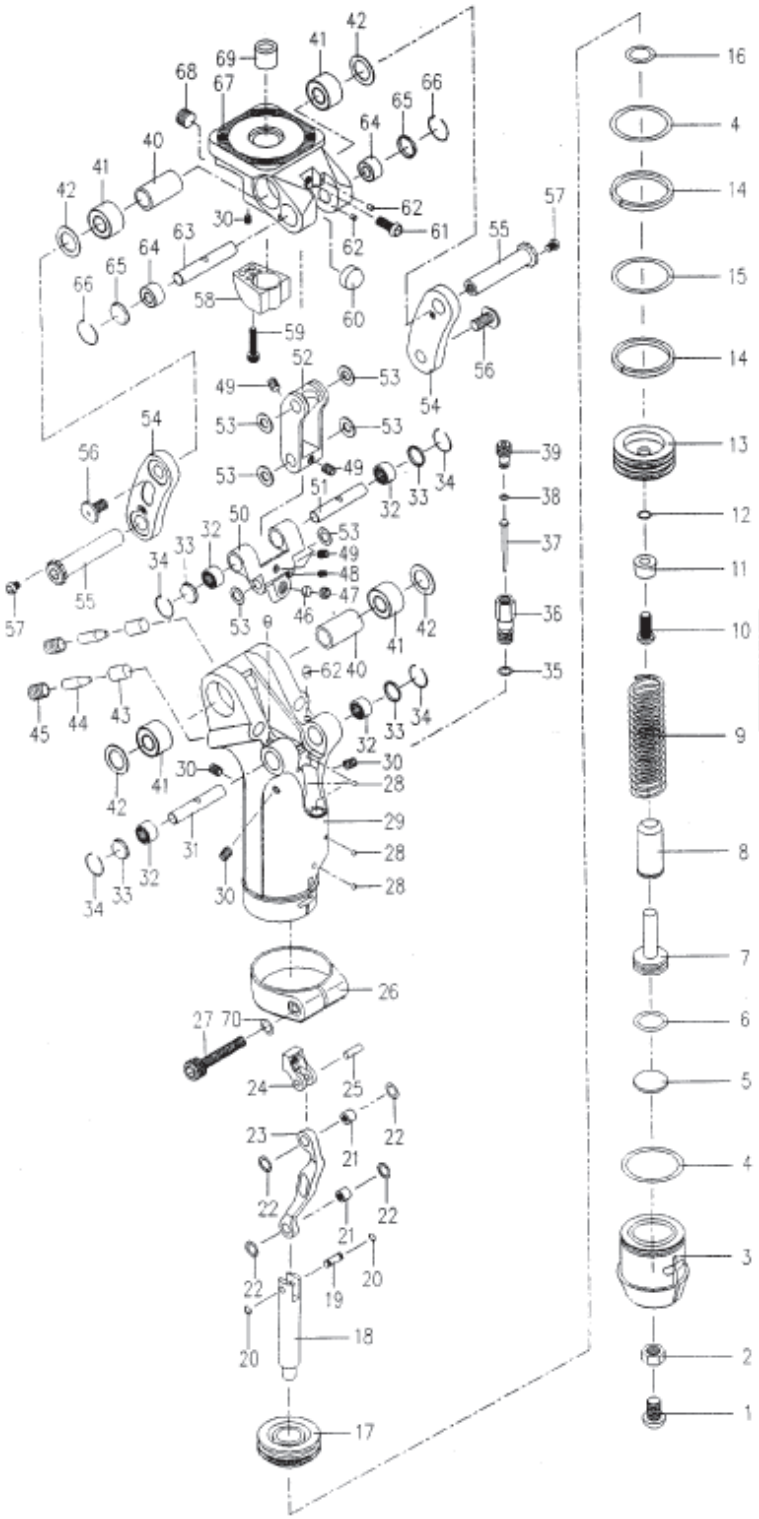

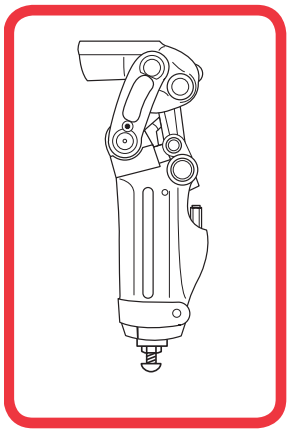

TGK-5PSØ

© Copyright 2015, DAW Industries, San Diego, CA. All Rights Reserved.

TGK-5PSØHA

PC PERFORMER KNEE

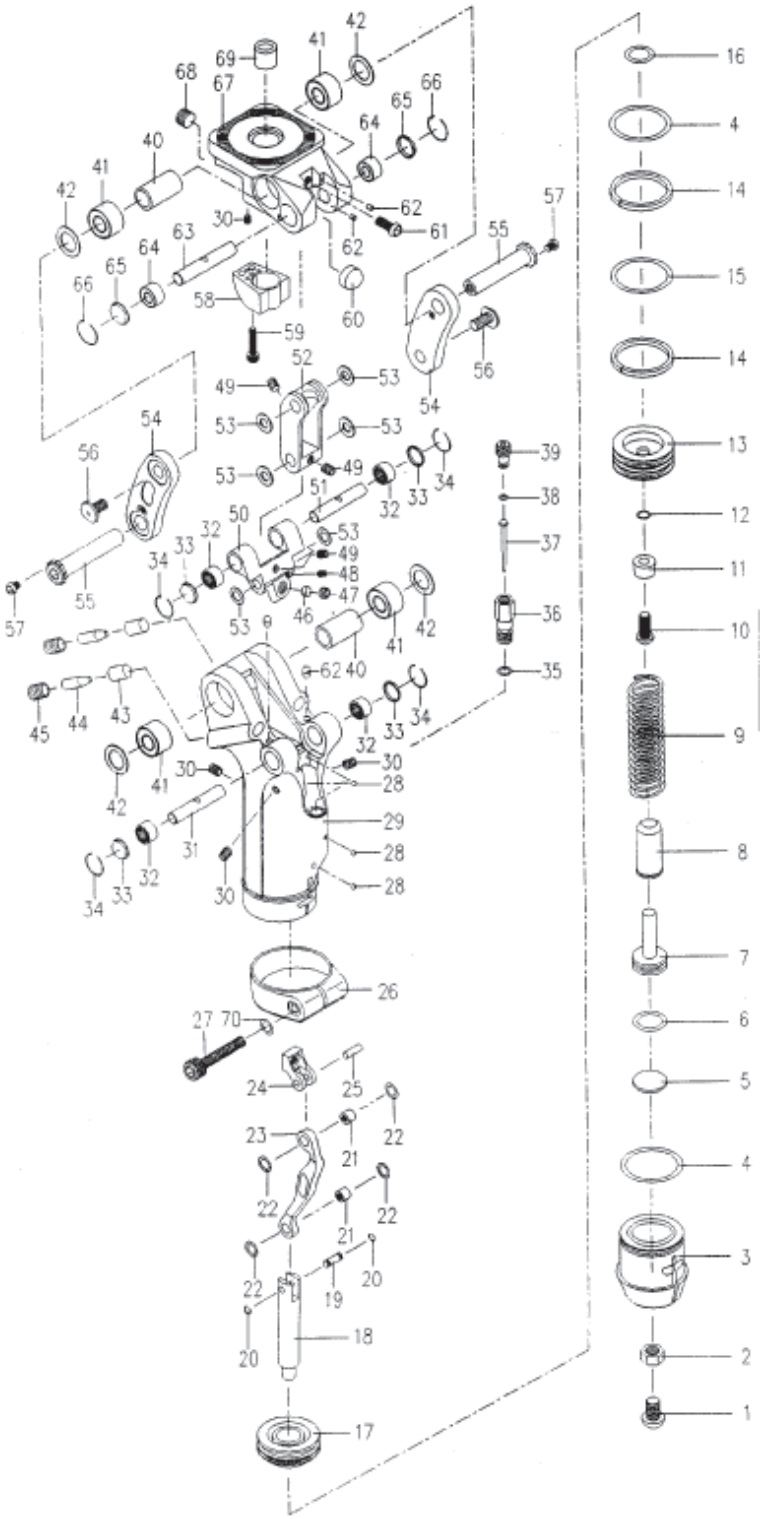

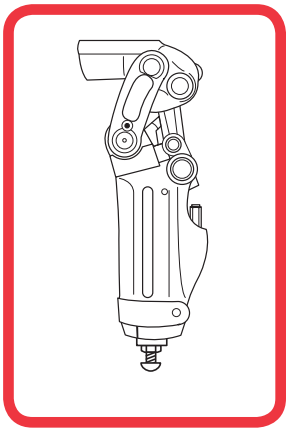

TGK-5PSØHA

© Copyright 2015, DAW Industries, San Diego, CA. All Rights Reserved.

SCHEMATICS

TGK-5PSØSLK

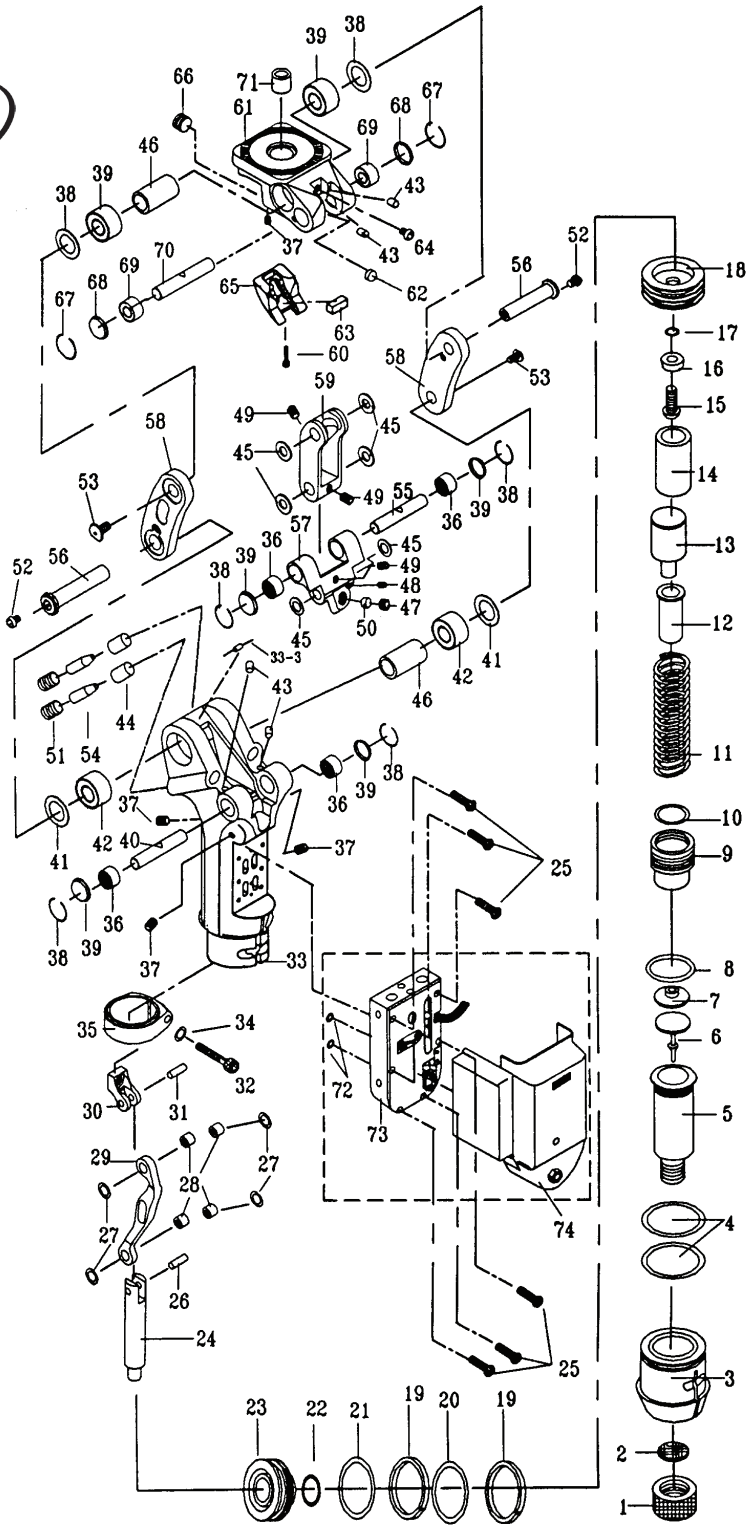

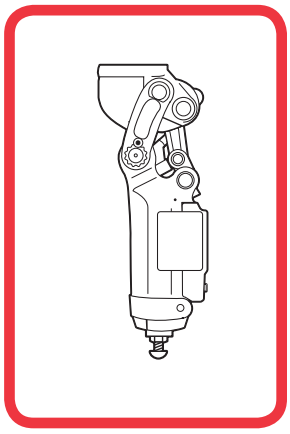

TGK-5PSØSLK

© Copyright 2015, DAW Industries, San Diego, CA. All Rights Reserved.

TGK-5PS1Ø

PC PERFORMER KNEE

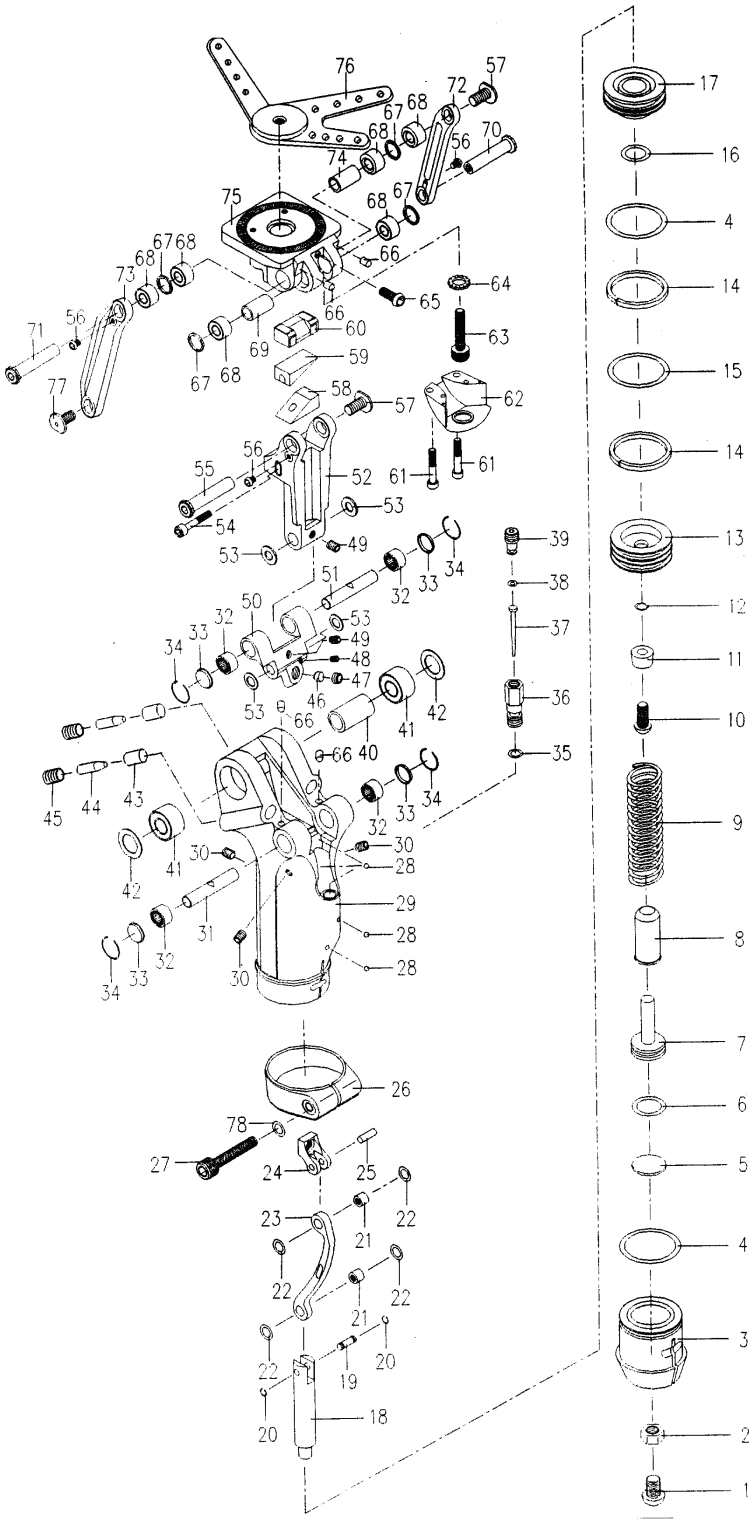

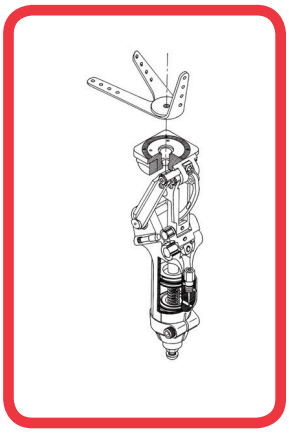

TGK-5PS1Ø

© Copyright 2015, DAW Industries, San Diego, CA. All Rights Reserved.

SCHEMATICS

THK-4PSC
TRUE VARIABLE CADENCE

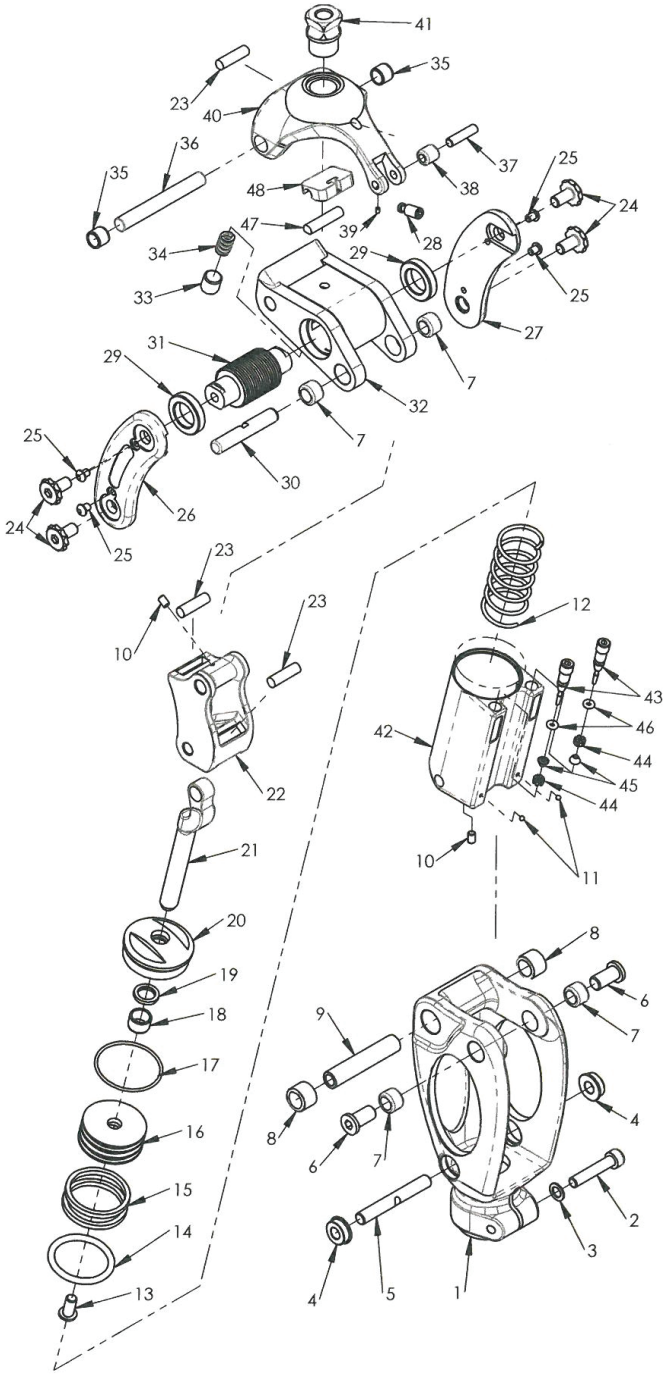

© Copyright 2015, DAW Industries, San Diego, CA. All Rights Reserved.

THK-4PSSL

TRUE VARIABLE CADENCE

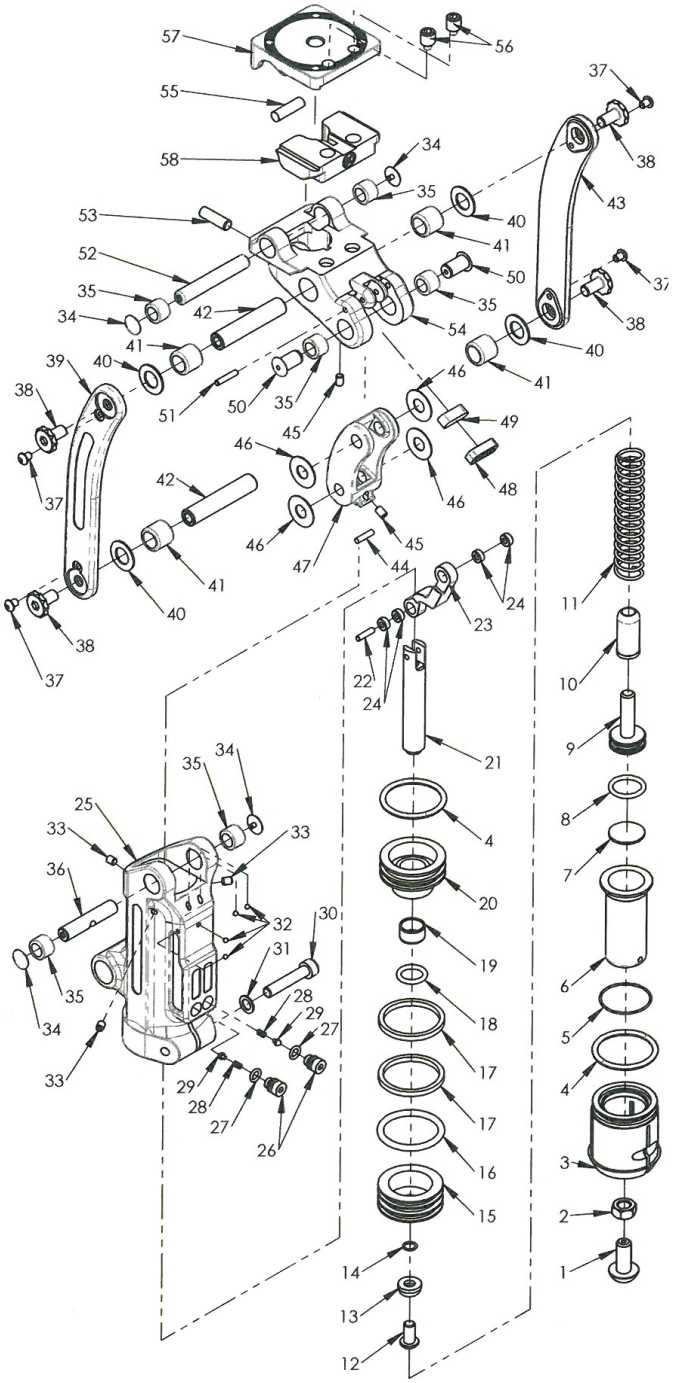

© Copyright 2015, DAW Industries, San Diego, CA. All Rights Reserved.

SCHEMATICS

THK-4RP1HW

PC PERFORMER KD KNEE

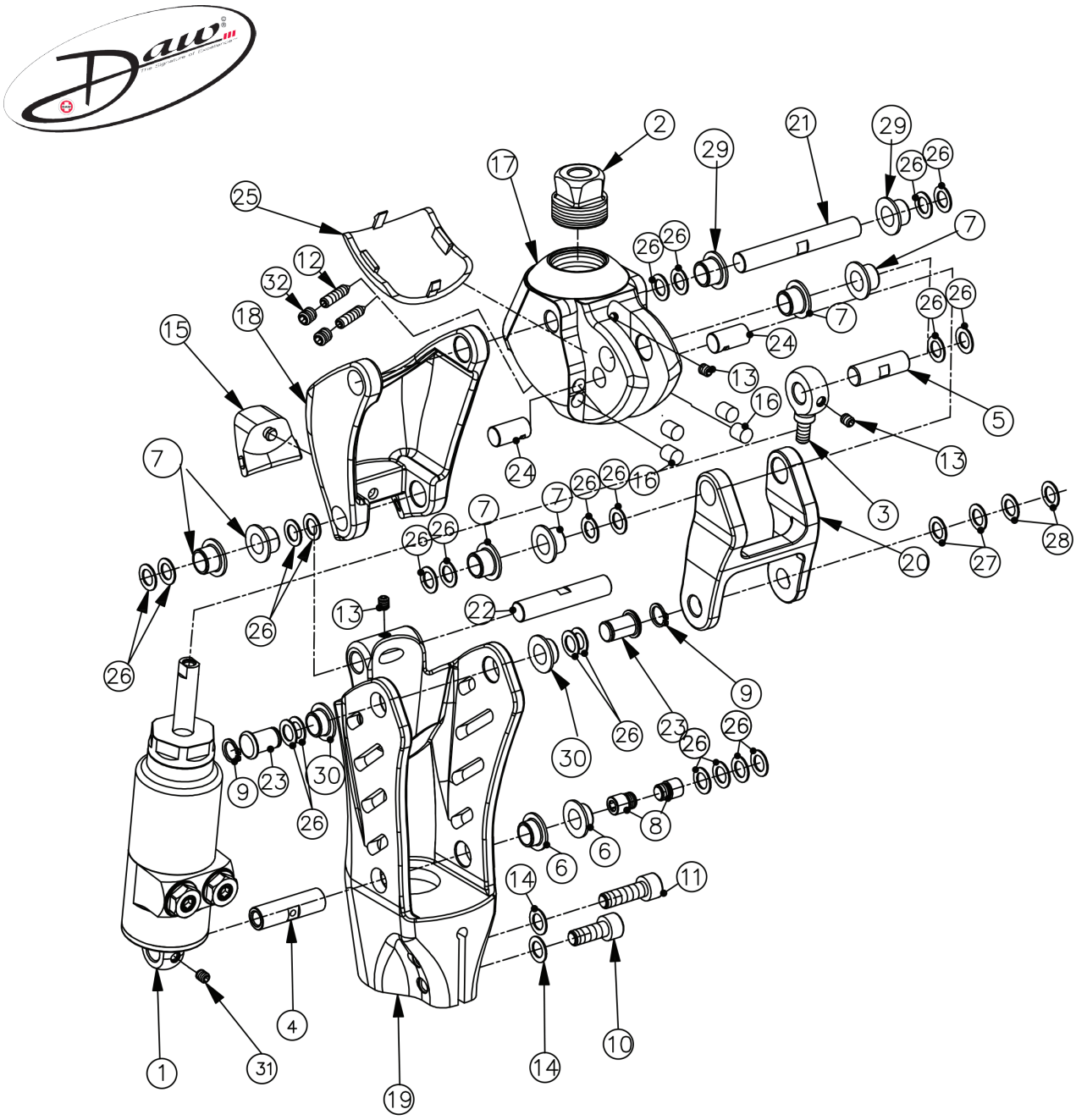

© Copyright 2015, DAW Industries, San Diego, CA. All Rights Reserved.

THK-5PSØMPK

PC PERFORMER KD KNEE

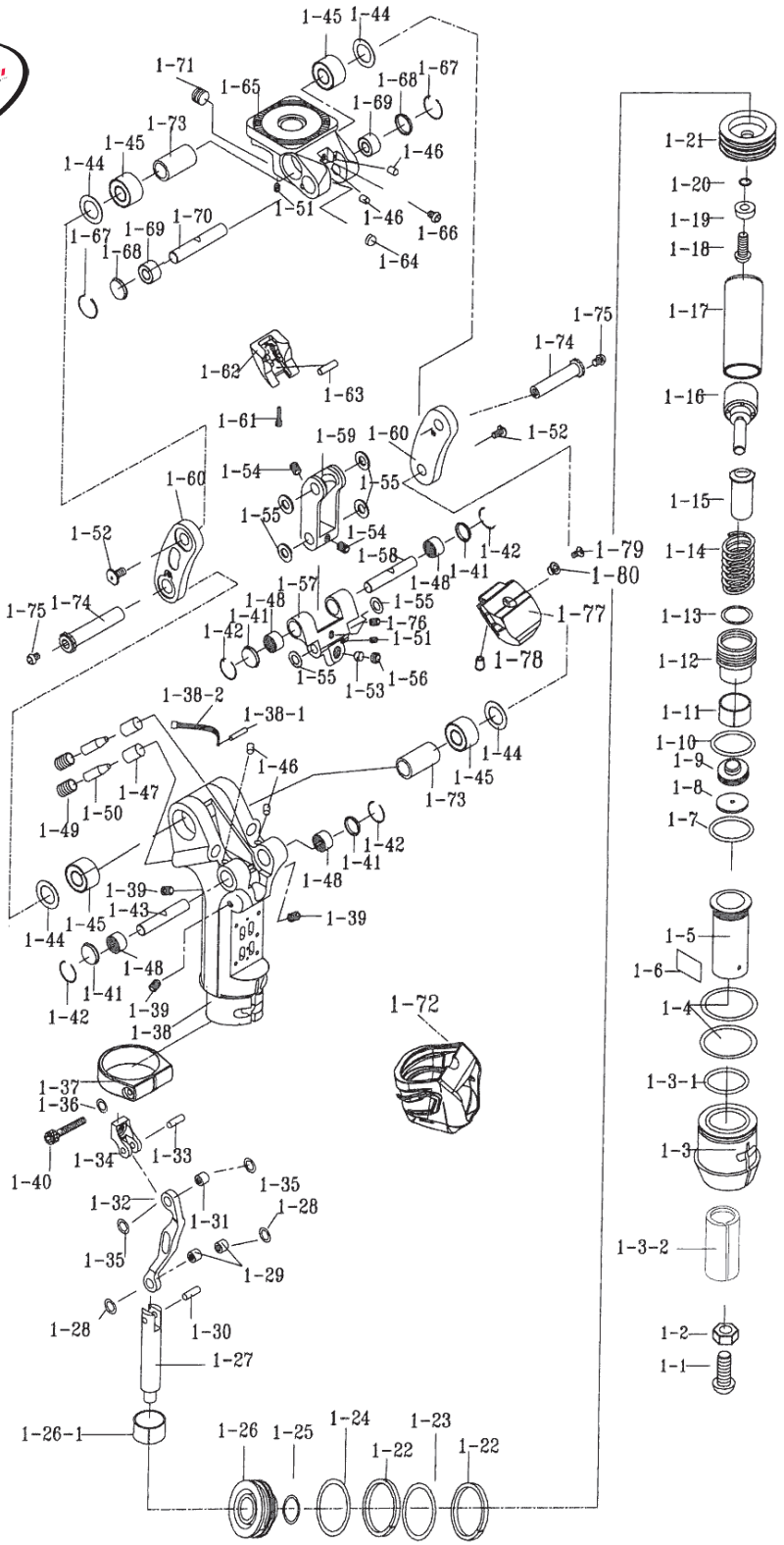

© Copyright 2015, DAW Industries, San Diego, CA. All Rights Reserved.

SCHEMATICS

THK-5PSØMPK PYR

TRUE VARIABLE CADENCE

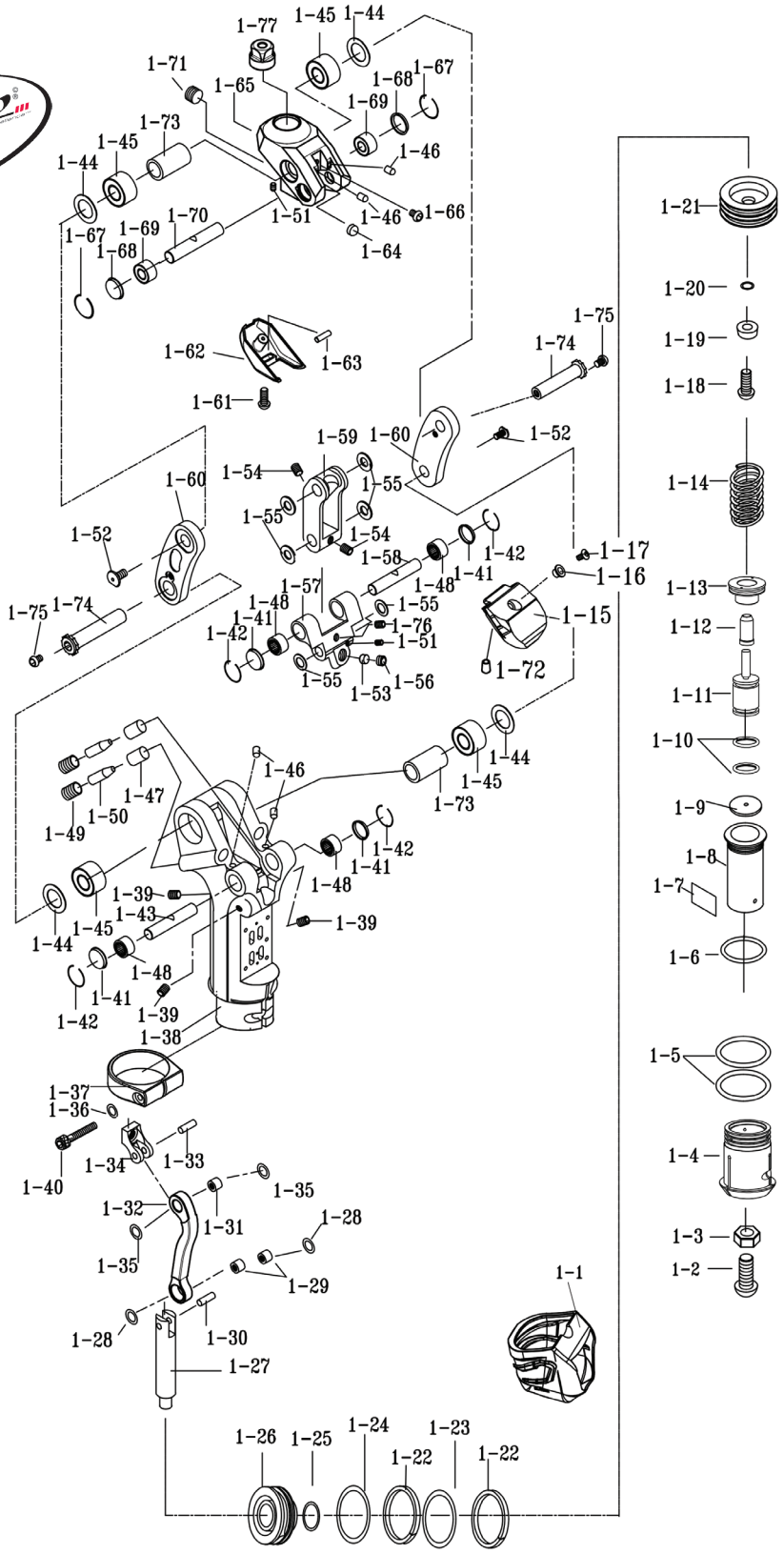

DAW INDUSTRIES

© Copyright 2015, DAW Industries, San Diego, CA. All Rights Reserved.

THK-5PS1ØMPK

PC PERFORMER KD KNEE

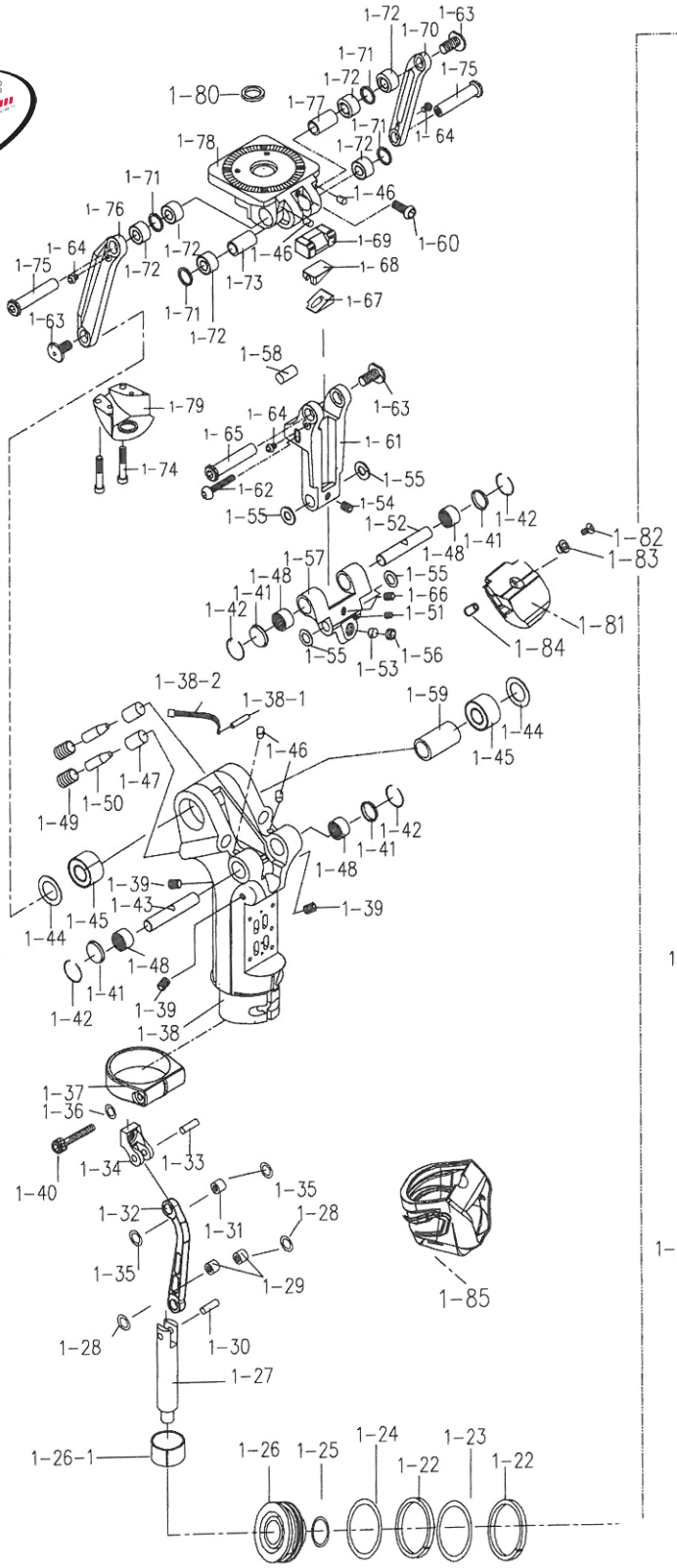

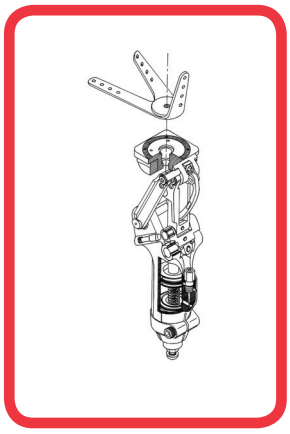

THK-5PS1ØMPK

© Copyright 2015, DAW Industries, San Diego, CA. All Rights Reserved.

SCHEMATICS

TK-1001
SINGLE AXIS LOCKING KNEE

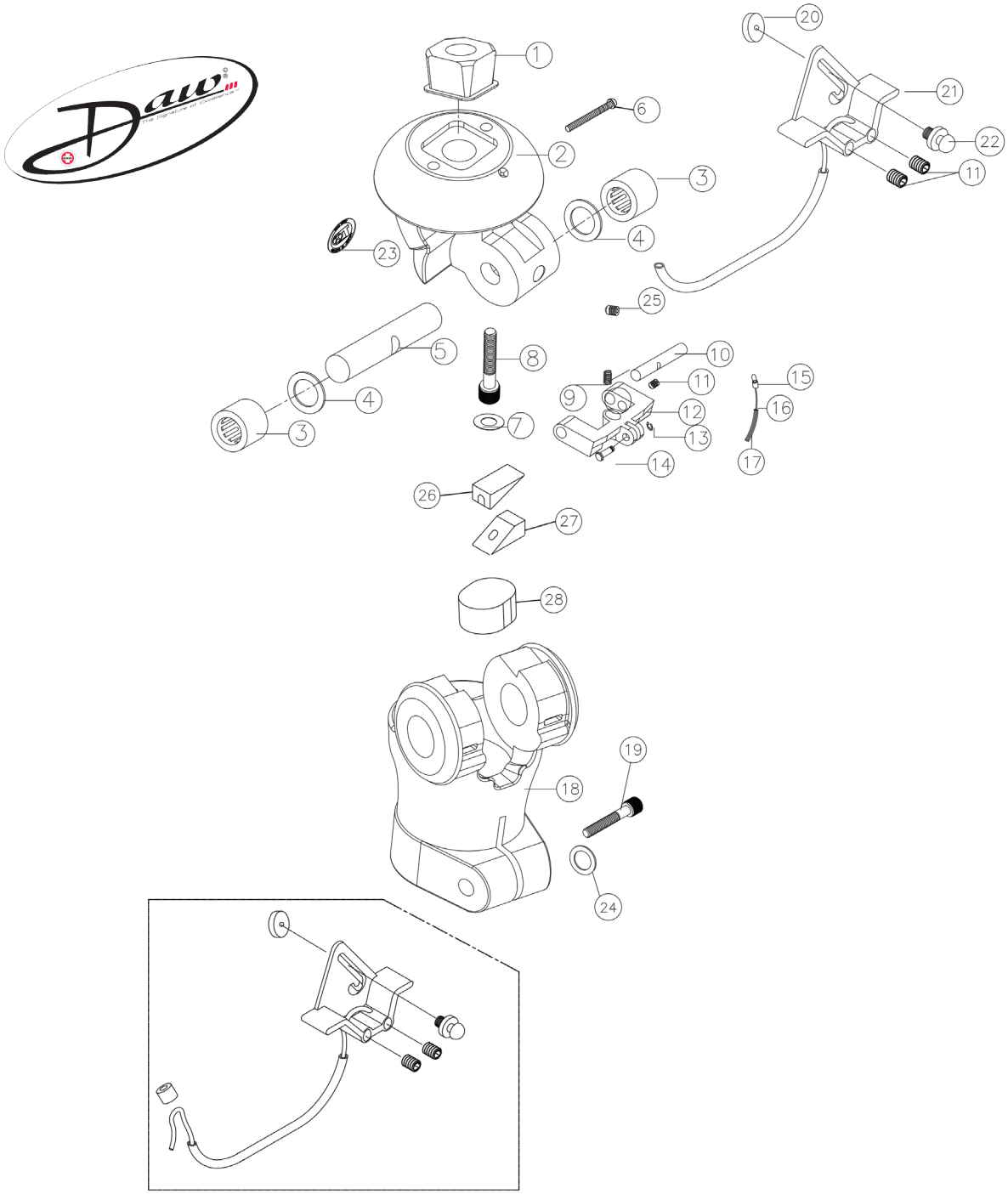

© Copyright 2015, DAW Industries, San Diego, CA. All Rights Reserved.

TK-1C1

SINGLE AXIS LOCKING KNEE

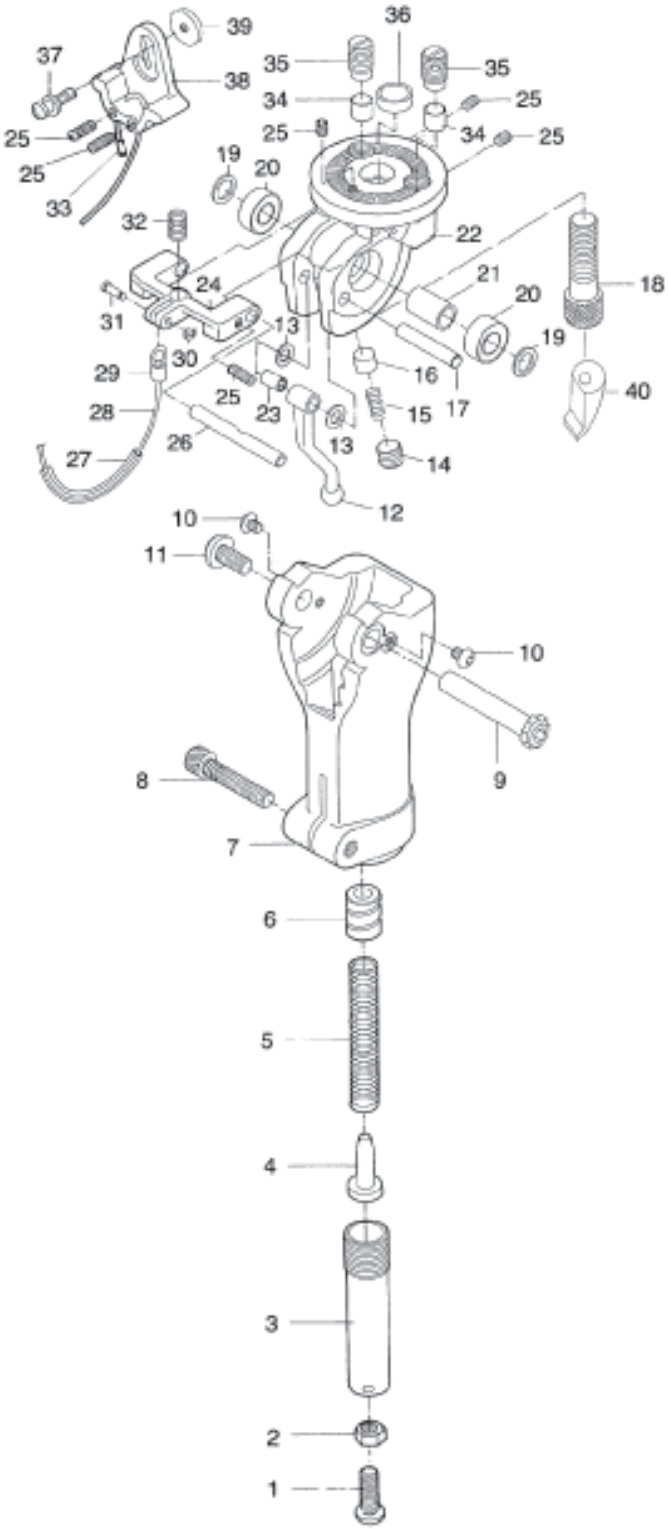

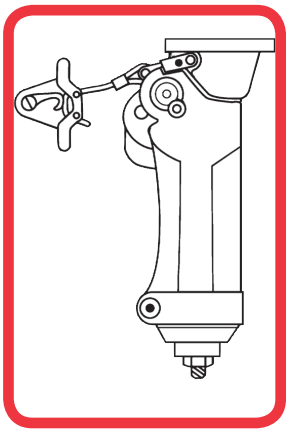

TK-1C1

© Copyright 2015, DAW Industries, San Diego, CA. All Rights Reserved.

SCHEMATICS

TK-1HØØ
SINGLE AXIS HYDRAULIC KNEE

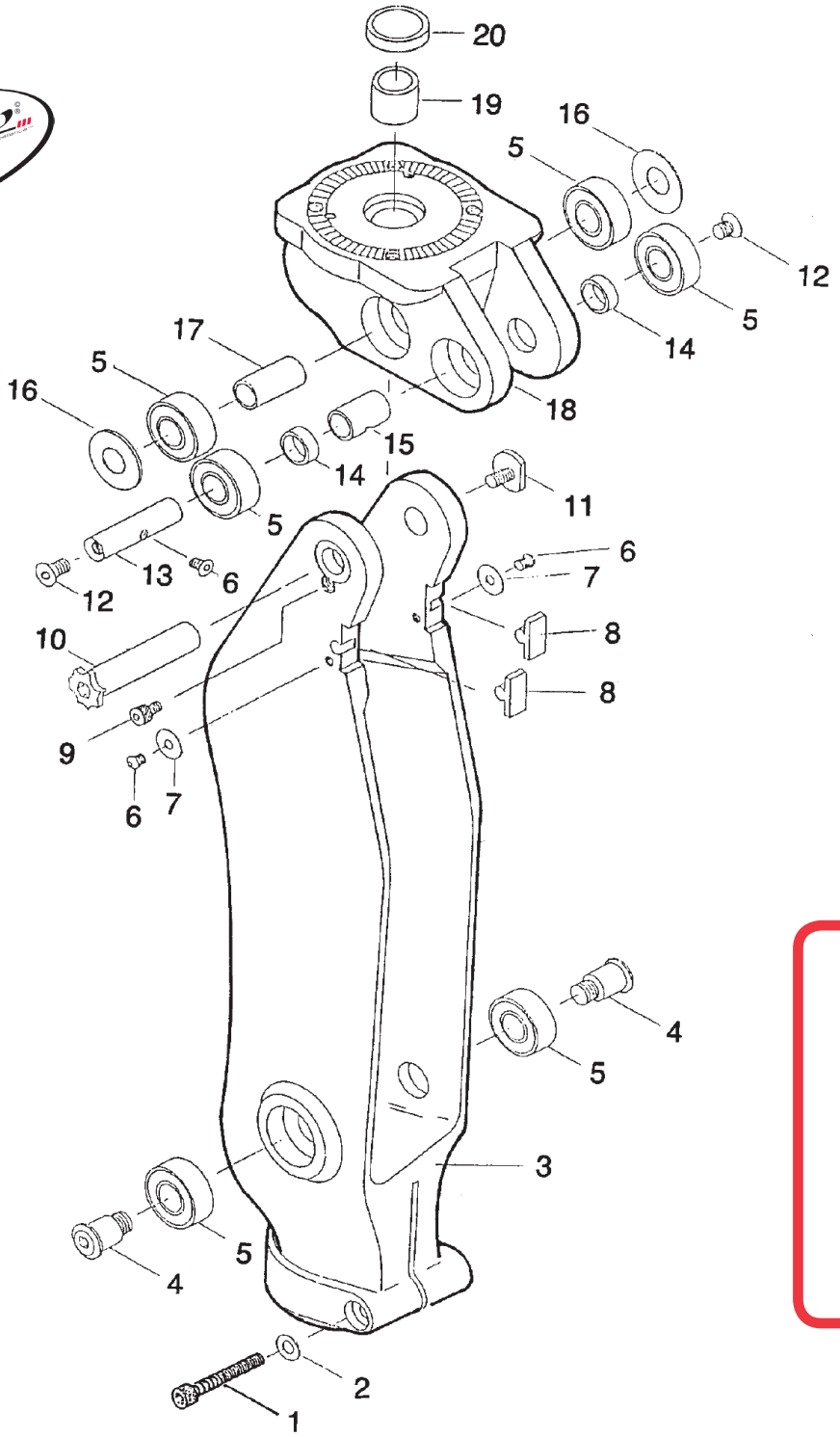

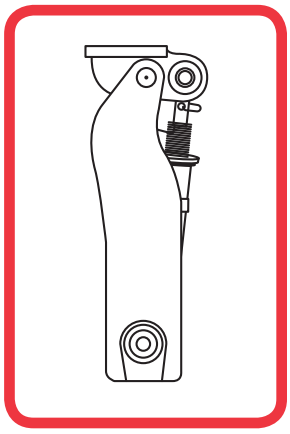

TK-1HØØ

© Copyright 2015, DAW Industries, San Diego, CA. All Rights Reserved.

TK-4ØC
4-BAR FRICTION KNEE

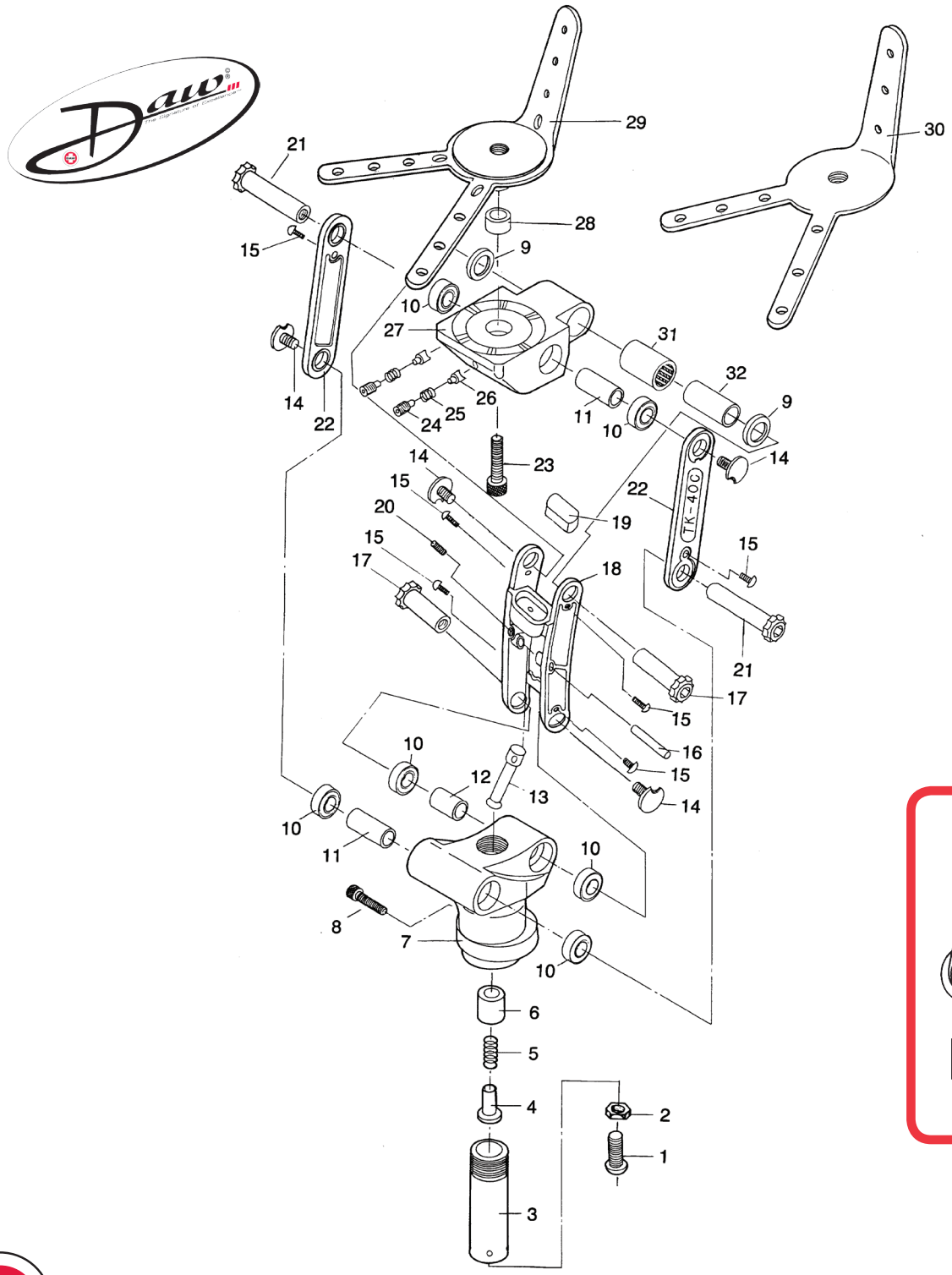

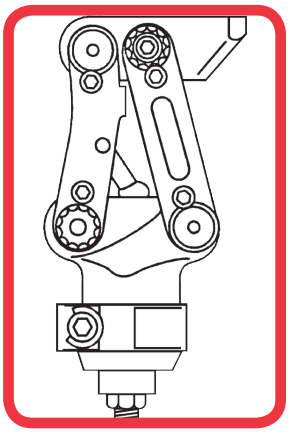

TK-4ØC

© Copyright 2015, DAW Industries, San Diego, CA. All Rights Reserved.

SCHEMATICS

TK-4PØC

4-BAR CHILD'S PNEUMATIC KNEE

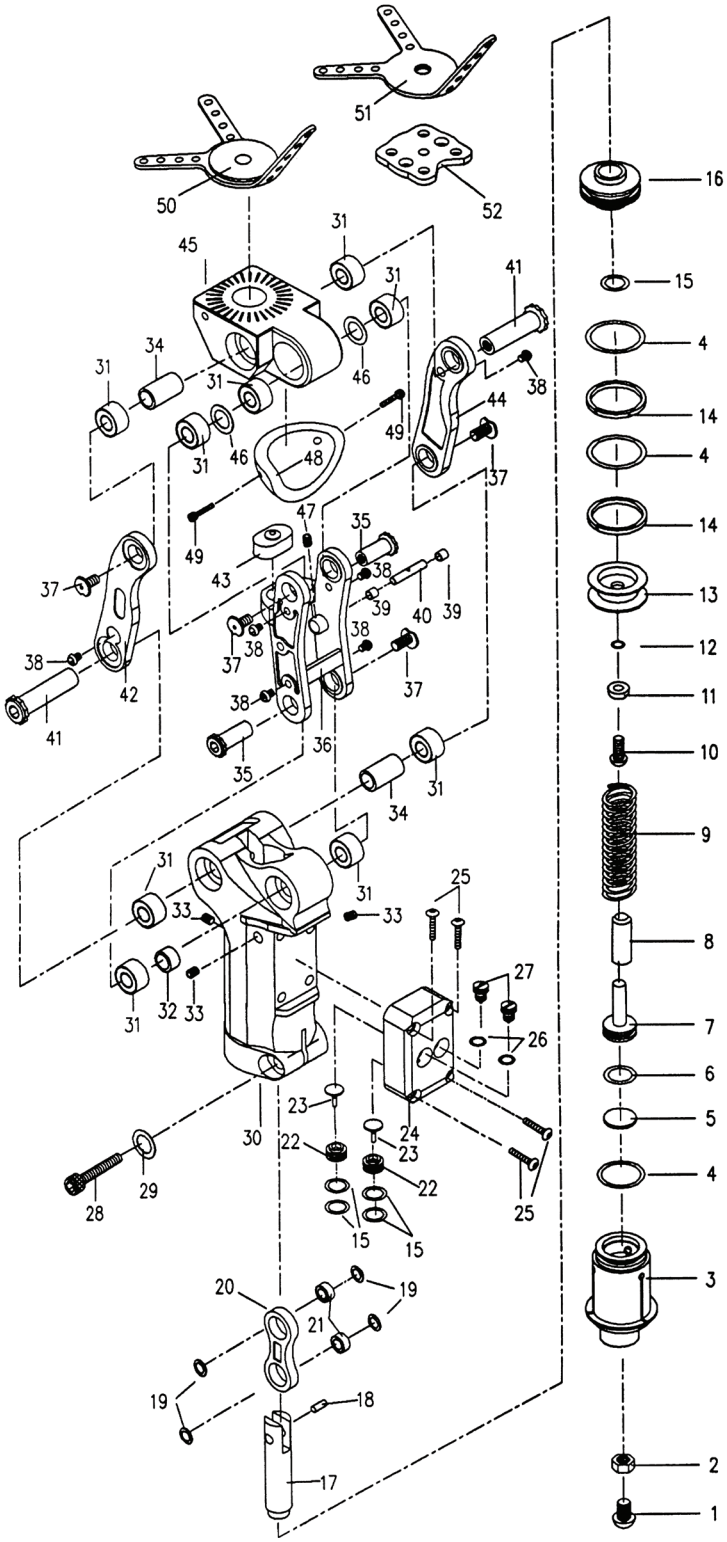

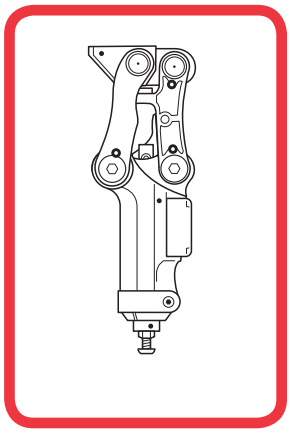

TK-4PØC

© Copyright 2015, DAW Industries, San Diego, CA. All Rights Reserved.

TK-4ØØØ

4-BAR FRICTION KNEE

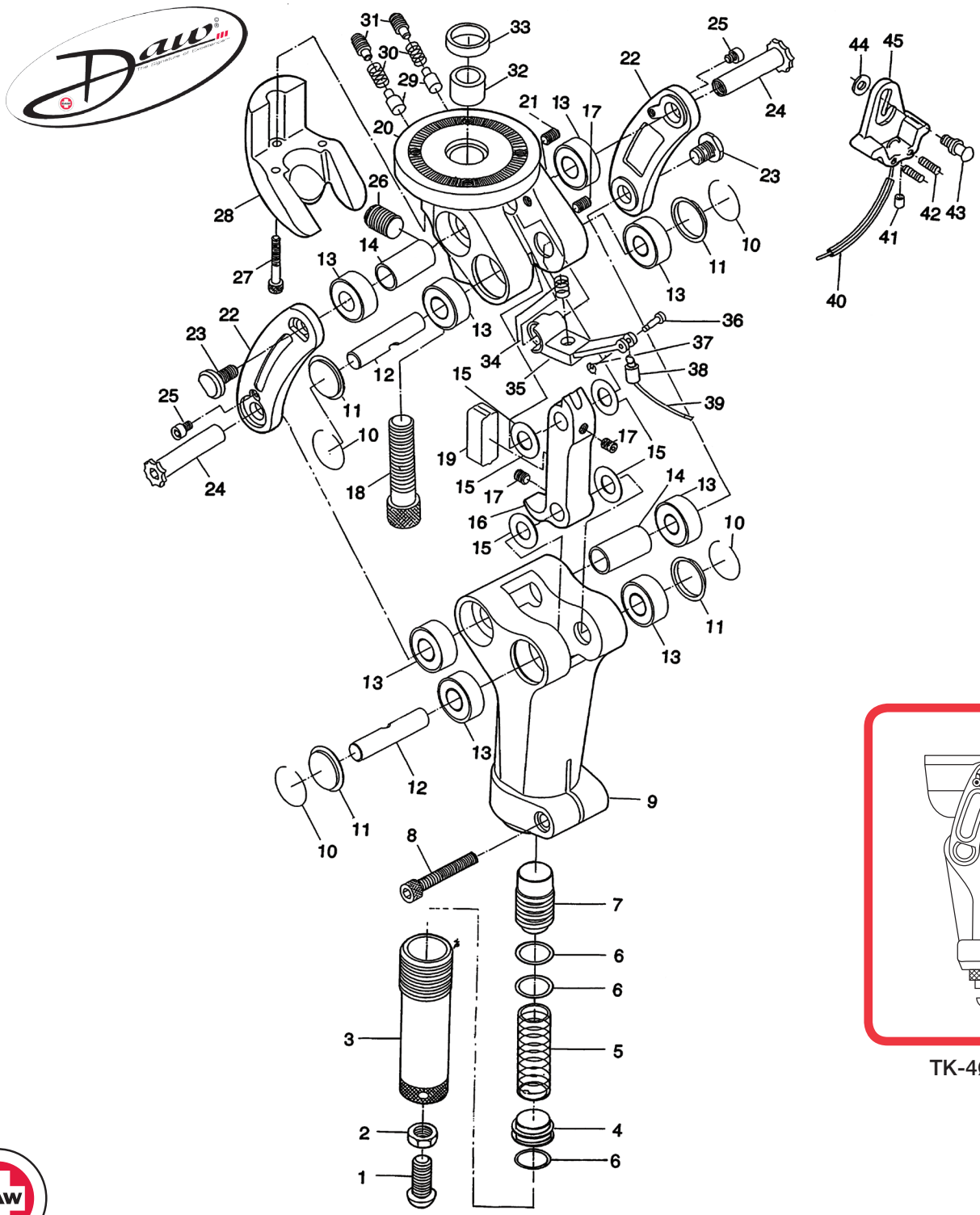

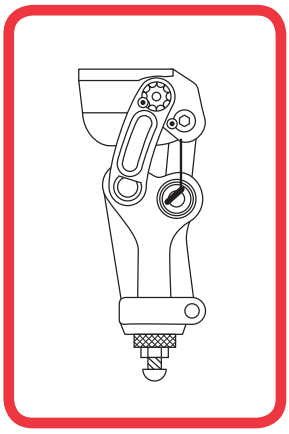

TK-4ØØØ

© Copyright 2015, DAW Industries, San Diego, CA. All Rights Reserved.

SCHEMATICS

TK-4ØØ1

4-BAR FRICTION KNEE

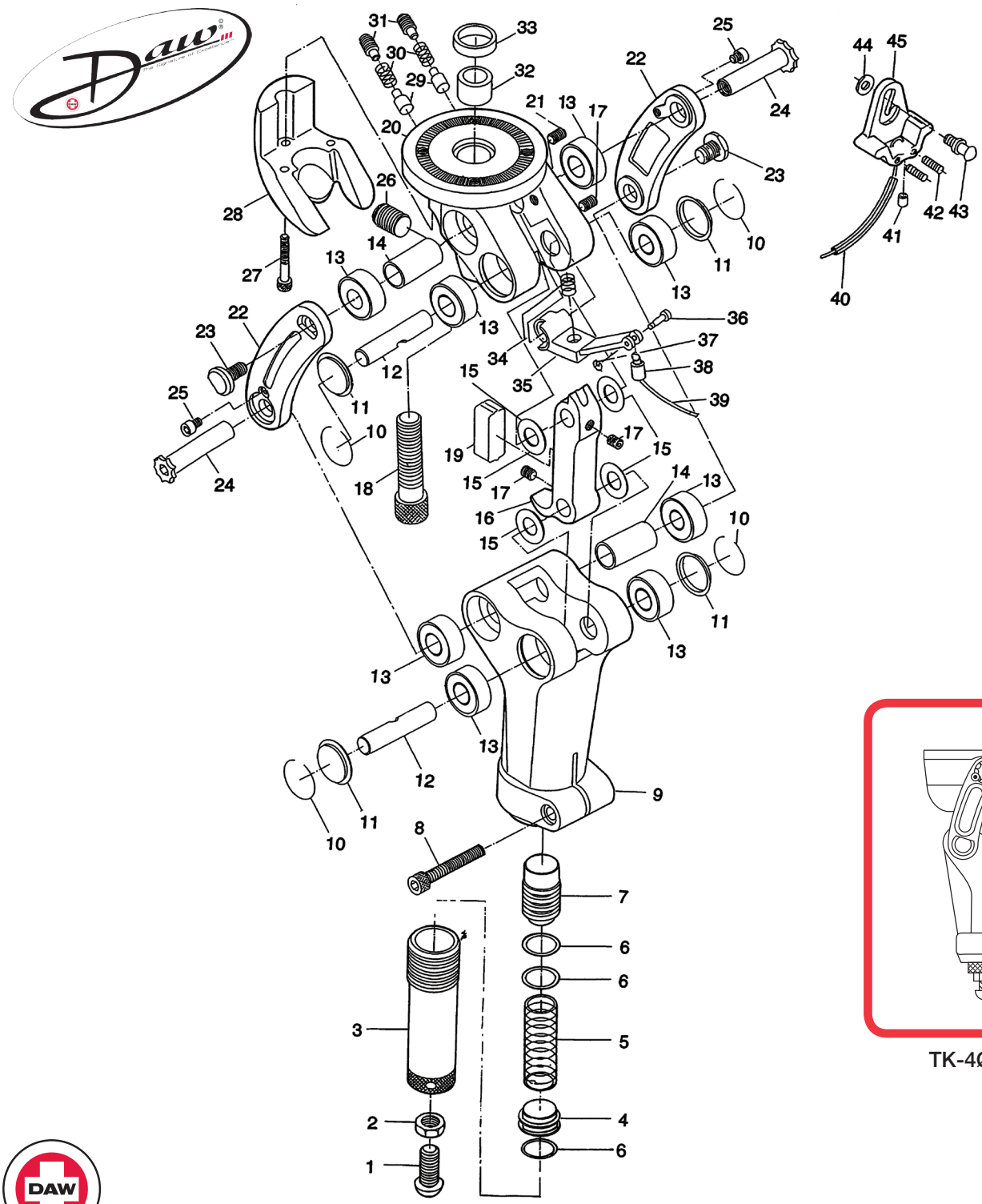

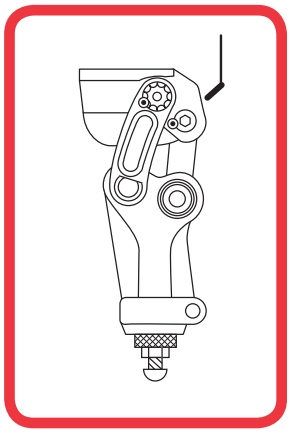

TK-4ØØ1

© Copyright 2015, DAW Industries, San Diego, CA. All Rights Reserved.

TK-4Ø1Ø

4-BAR FRICTION KNEE

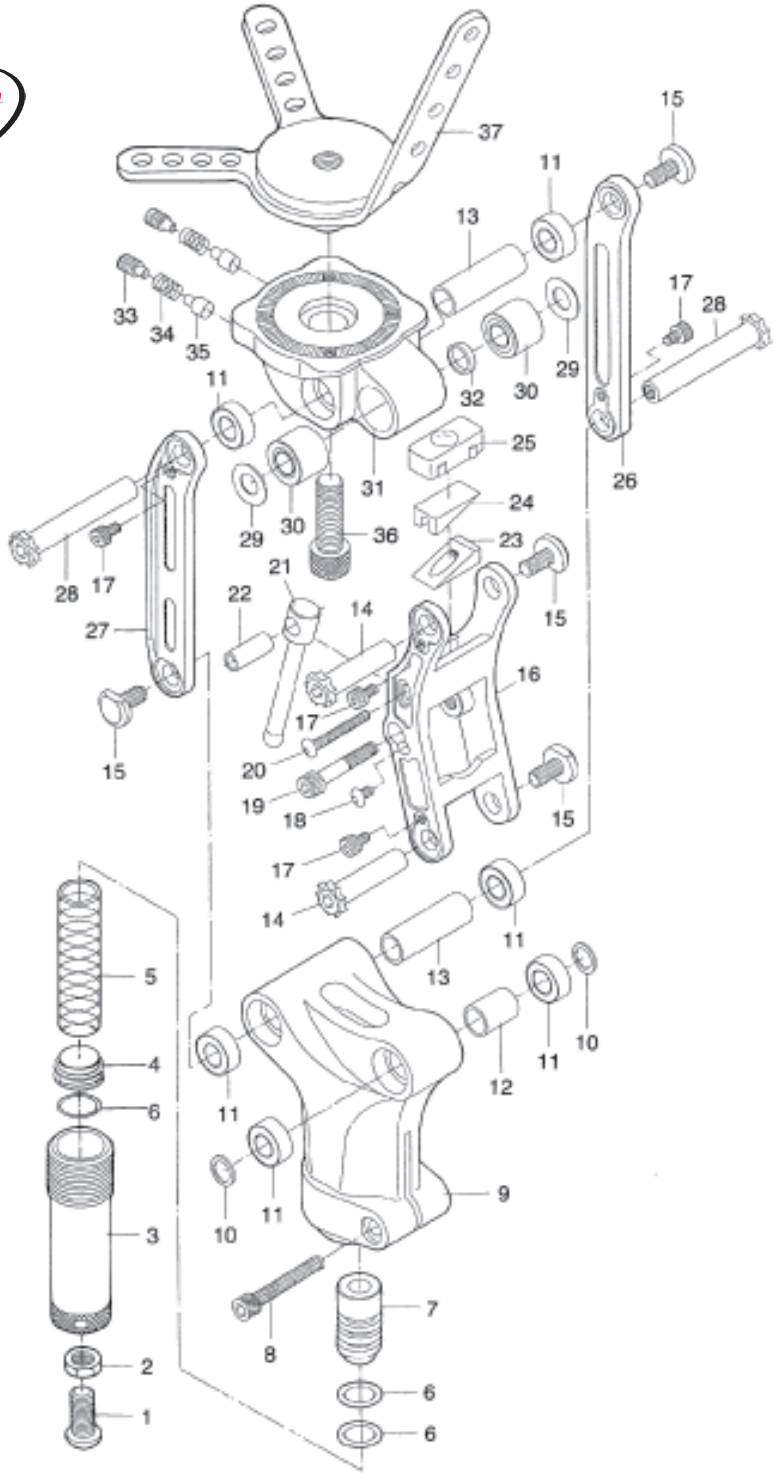

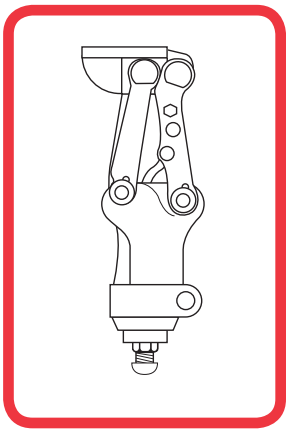

TK-4Ø1Ø

© Copyright 2015, DAW Industries, San Diego, CA. All Rights Reserved.

SCHEMATICS

TK-4PØØ
4-BAR PNEUMATIC KNEE

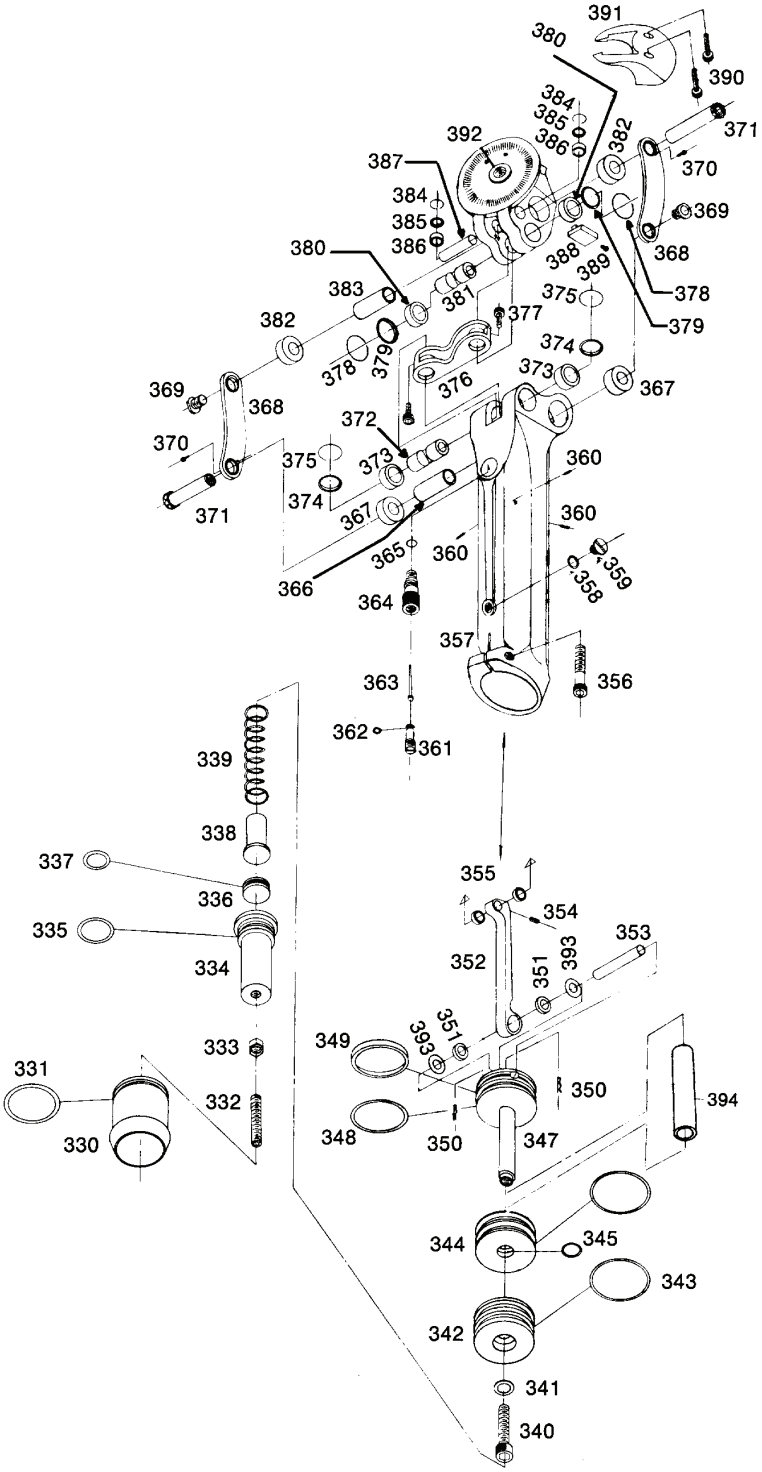

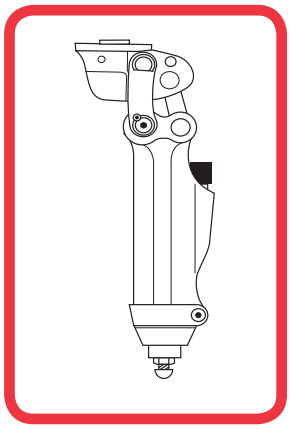

TK-4PØØ

© Copyright 2015, DAW Industries, San Diego, CA. All Rights Reserved.

TK-4PØØ-P
4-BAR PNEUMATIC KNEE

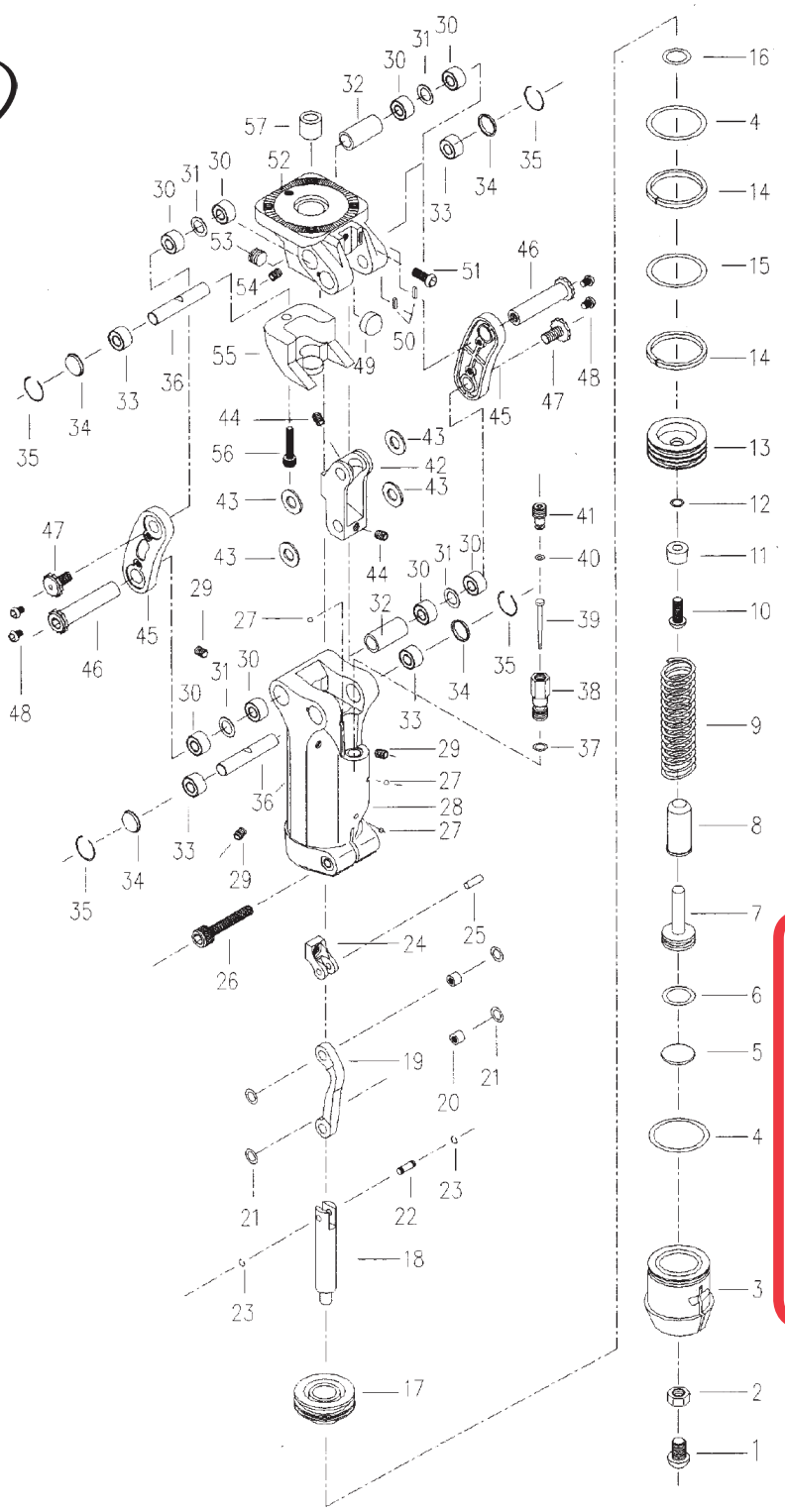

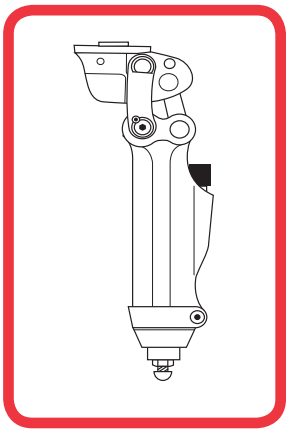

TK-4PØØ-P

© Copyright 2015, DAW Industries, San Diego, CA. All Rights Reserved.

SCHEMATICS

TGH-Ø1
FLEXION LOADED

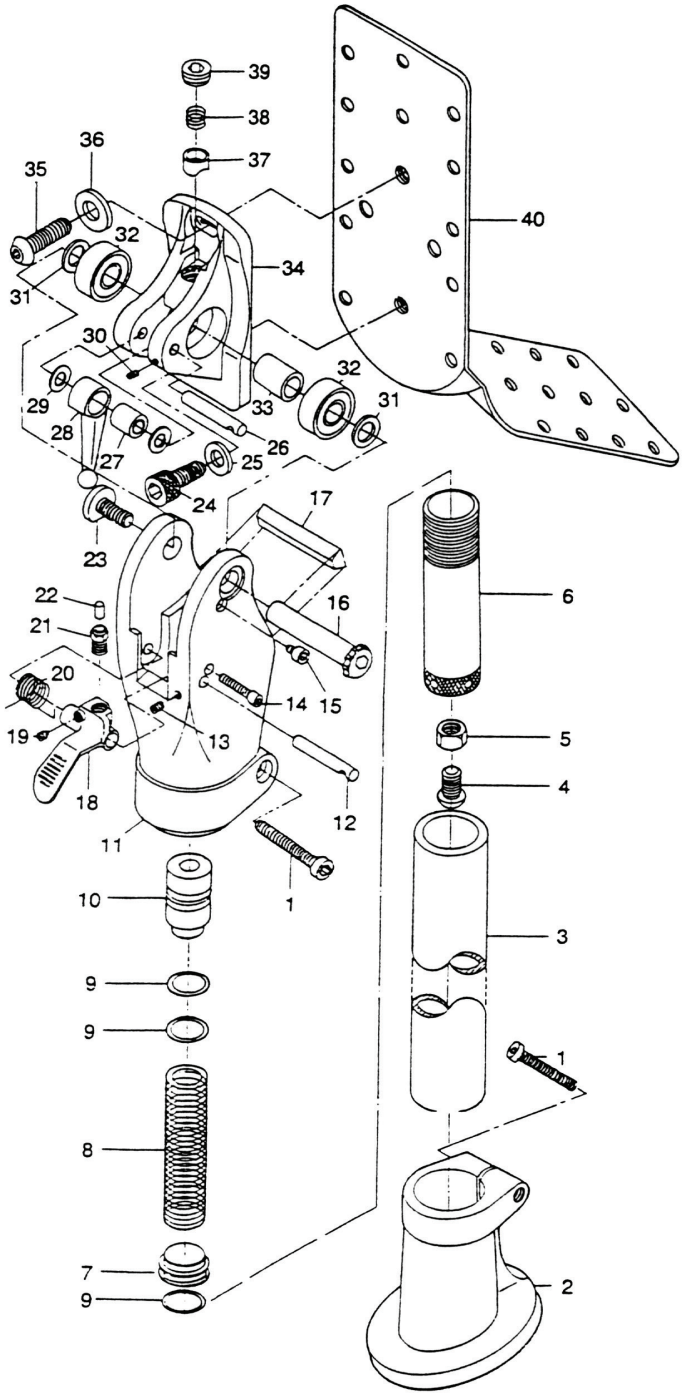

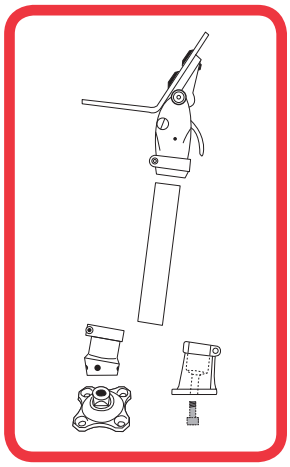

TGH-Ø1

© Copyright 2015, DAW Industries, San Diego, CA. All Rights Reserved.

TH-Ø1
FLEXION LOADED

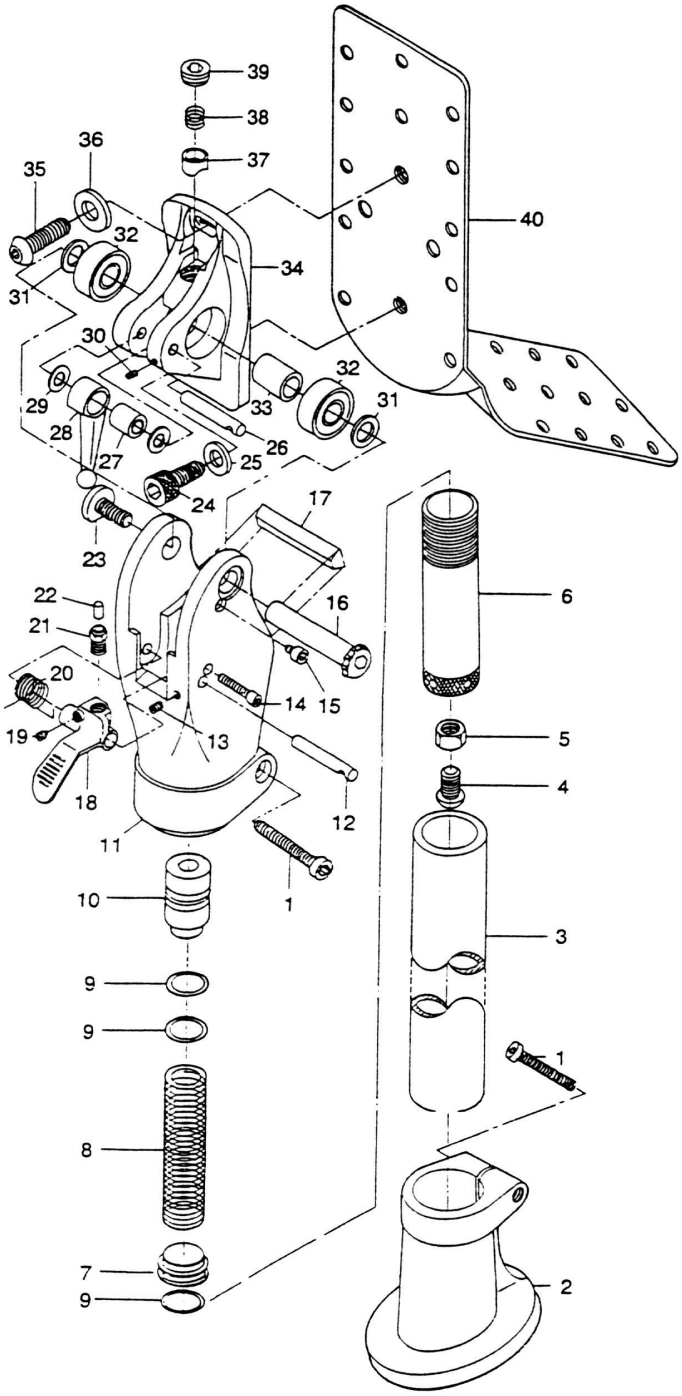

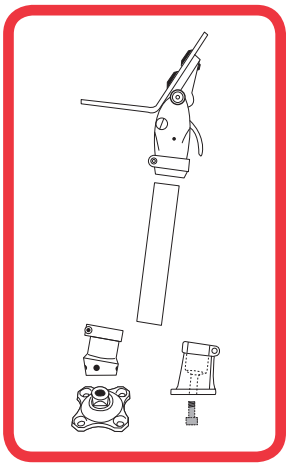

TH-Ø1

© Copyright 2015, DAW Industries, San Diego, CA. All Rights Reserved.

SCHEMATICS

TCH-Ø1
CHILD'S HIP JOINT

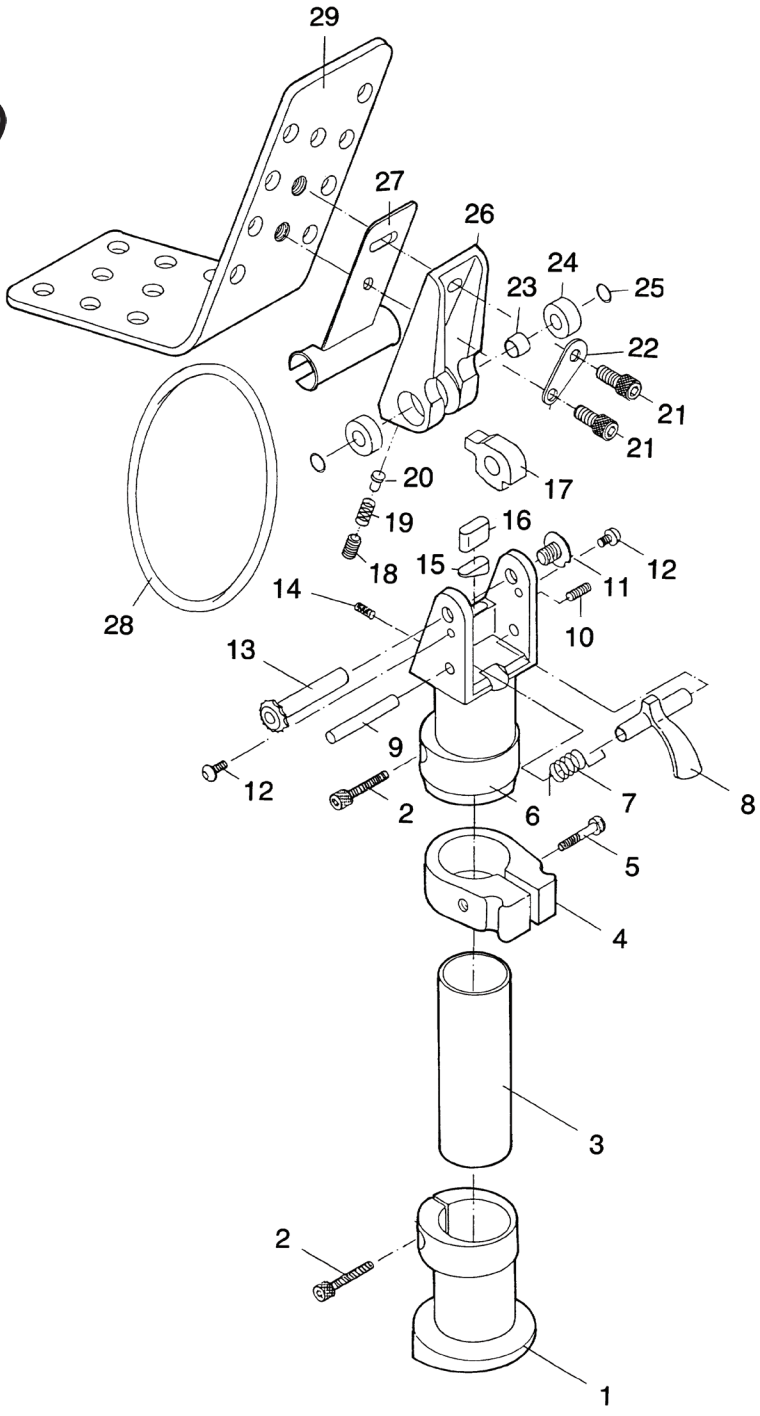

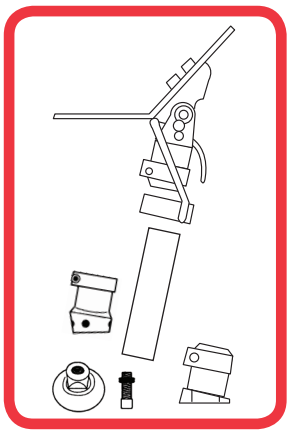

TCH-Ø1

© Copyright 2015, DAW Industries, San Diego, CA. All Rights Reserved.